OKIDATA®

Service Manual

OKIFAX 1050 // 2350 // 2450
FACSIMILE PRODUCTS

Adobe Acrobat printable reference
copy of the OKIDATA Service Training Manual.
09/17/97

Note: This Adobe Acrobat version of the Okidata Service Training Manual was built with the pictures rendered at 300 dpi, which is ideal for printing, but does not view on most displays well.

Copyright 1997, Okidata, Division of OKI America, Inc. All rights reserved. See the OKIDATA Business Partner Exchange (BPX) for any updates to this material. (http://bpx.okidata.com)

Table of Contents	Page

Service Guide OF1050/2350/2450

0 About This Manual

Front Cover 1
Federal Communications Commission Requirements for End Users 2
FCC Telephone Consumer Protection Act 3
Canadian Department of Communications Requirements for End Users 4
Federal Communications Commission Radio Frequency Statement 5
Canadian Department of Communications Radio Interference Statement 6

1 General Information

1.1 General Performance 7
1.2 General User's Function 8
1.3 General Maintenance Functions 9
1.4 General Appearance 10
....Figure 1.4.2 OKIFAX 1050 Control Panel 11
....Figure 1.4.3 OKIFAX 2350 Control Panel 12
....Figure 1.4.4 OKIFAX 2450 Control Panel 13
1.5 Basic Performance Specifications 14
1.6 Reports and Lists 15
....Reports and Lists - Continued 16
.....Telephone Directory for OKIFAX 1050 (1/2): (Example) 17
.....Telephone Directory for OKIFAX 1050 (2/2): (Example) 18
.....Telephone Directory for OKIFAX 2350 (1/4): (Example) 19
.....Telephone Directory for OKIFAX 2350 (2/4): (Example) 20
.....Telephone Directory for OKIFAX 2350 (3/4): (Example) 21
.....Telephone Directory for OKIFAX 2350 (4/4): (Example) 22
.....Telephone Directory for OKIFAX 2450 (1/6): (Example) 23
.....Telephone Directory for OKIFAX 2450 (2/6): (Example) 24
.....Telephone Directory for OKIFAX 2450 (3/6): (Example) 25
.....Telephone Directory for OKIFAX 2450 (4/6): (Example) 26
.....Telephone Directory for OKIFAX 2450 (5/6): (Example) 27
.....Telephone Directory for OKIFAX 2450 (6/6): (Example) 28
....Reports and Lists - Continued 29

2 Setup Information

2A-Setup Information 30
2.2 Site Selection 31
2.3 Unpacking 32
2.4 Check of Contents 33
2.5 Installation of Attachments 34
....Toner cartridge 35

Table of Contents	Page
....Recording paper	36
....Document stacker	37
2.6 AC Cord Connection	38
2.7 Telephone and Line Connections	39
2.8 Packing for Shipment	40
2B. Programming and Initial Settings	41
....2.9.2 Technical Functions	42
....2.9.2.02 TEL/FAX automatic switching	43
....2.9.2.03 TAD mode	44
.....TEL/FAX mode flow chart	45
.....TAD mode flow chart	46
.....TAD mode flow chart	47
....2.9.3 Technical Functions Example	48
....2.9.3.02 Technical functions	49
.....Table 2.9.2 (1/3) Technical Functions	50
.....Table 2.9.2 (2/3) Technical Functions	51
.....Table 2.9.2 (3/3) Technical Functions	52
....2.9.4 Users Functions	53
.....Table 2.9.3 (1/6) Feature Specifications	54
.....Table 2.9.3 (2/6) Feature Specifications	55
.....Table 2.9.3 (3/6) Feature Specifications	56
.....Table 2.9.3 (4/6) Feature Specifications	57
.....Table 2.9.3 (5/6) Feature Specifications	58
.....Table 2.9.3 (6/6) Feature Specifications	59
.....Users Initial Settings	60
.....Table 2.9.4 (1/3) One-touch key Program Settings	61
.....Table 2.9.4 (2/3) One-touch key Program Settings	62
.....Table 2.9.4 (3/3) One-touch key Program Settings	63
.....Table 2.9.4 User Function Program Settings	64
....2.9.5 User's Functions Example	65
.....Table 2.9.5 User's Functions	66
.....2.9.5.02 Ring response time	67
.....2.9.5.03 Dial parameters (In case the service bit is "OFF".)	68
....2.9.6 Clock Adjustment	69
....2.9.7 Dual Access Operation (for OKIFAX 2350/2450)	70
....2.9.8 System Data Programming	71
....2.9.9 One-Touch Key Programming	72
....2.9.10 Two-digit Auto Dial Programming	73
....2.9.11 Group setting	74
....2.9.12 Dial Parameters Settings	75
.....2.9.12.02 Procedure	76
.....Table 2.9.6 Dial Parameters Settings	77
....2.9.13 Programming Mail Box Password	78
....2.9.14 Memory Operations	79

Table of Contents	Page
.....2.9.14.02 CONF. RX MSG. PRINT	80
....2.9.15 Off-line Tests	81
....2.9.16 On-line Tests	82
.....2.9.16.02 Reception	83
.....Fig. 2.9.5 Typical Transmission Flow	84
.....Fig. 2.9.6 Typical Reception Flow	85
2C. Installation of Optional Units	86
....2.10.02 Procedure	87
.....Installation of the memory board	88
.....Installation of PCIU (PC interface) board	89
3 Board Description/Printer Operation	
Section 1: Board Description - 3.1 Unit Configuration and Block Diagram	90
....3.1.02 The unit configuration of the OKIFAX 2350/2450 is as follows:	91
3.2 Overall Dimension and Mechanical Structure of OKIFAX 1050	92
3.3 Overall Dimension and Mechanical Structure of OKIFAX 2350/2450	93
3.4 Boards and Units	94
3.5 Function of Each Board	95
....3.5.02 Operation panel unit: YOPE (OKIFAX 1050)/YOPE-2 (OKIFAX 2350/2450) board	96
....3.5.03 NCUU board	97
....3.5.04 Power supply unit: FXVE (120V)/FXVH (230V) board	98
....3.5.05 MEMO (memory) board (Option)	99
....3.5.06 P050 board (Optional PC Interface)	100
....3.5.07 HOOK board (Optional handset)	101
....3.5.08 TELU board (Option): For US and Canada	102
....3.5.09 TQSB board (installed within second paper cassette option)	103
.....OKIFAX 1050 Block Diagram	104
.....Figure 3.5.2 OKIFAX 2350/2450 Block Diagram	105
3.6 Explanation of Signal Flow for OKIFAX 1050/2350/2450	106
....3.7 Signal Flow by Mode of operation (OKIFAX 1050)	107
....Okifax 1050 300 bps Send Signal	108
....Okifax 1050 300 bps Receive Signal	109
....Okifax 1050 G3 Send Picture Signal	110
....Okifax 1050 G3 Receive Picture Signal	111
....Okifax 1050 Report Print Signal	112
3.8 Signal Flow by Mode of Operation (OKIFAX 2350/2450)	113
....Okifax 2350/2450 300 bps Send	114
....Okifax 2350/2450 300 bps Receive Signal	115
....Okifax 2350/2450 G3 Send Picture Signal	116

Table of Contents	Page
....Okifax 2350/2450 G3 Receive Picture Signal	117
....Okifax 2350/2450 Report Print Signal	118
3.9 Power Supply Unit	119
....General functional description	120
....3.9.02 Power Supply Unit (FXVE/FXVH)	121
....3.9.03 FXVE (for 120 V)/FXVH (for 230 V) Circuit Diagram (2/2)	122
3.10 NCU Board	123
3.11 TELU Circuit Diagram (option)	124
....Block Diagram of TEL-U (option)	125
....Relationship between NCUU and TEL-U	126
3.12 MEMO (memory) Circuit Diagram (option)	127
3.13 P050 (PC interface unit) Circuit Diagram (option)	128
3.14 TQSB (Second tray) Circuit Diagram: option	129
Section 2: Print Operation - 3.15 Mechanical Components	130
....Layout of Print Station Components	131
3.16 Process Operations	132
....3.16.02 Charging	133
....3.16.03 Exposure	134
....3.16.4 Developing	135
....3.16.05 Transfer	136
....3.16.06 Fusing	137
....3.16.07 Cleaning	138
....3.16.08 Cleaning of rollers	139
3.17 Actual Electo-photographic Process	140
3.18 Errors List	141
3.19 Major Trouble Errors	142
3.20 Cleaning	143
3.21 Sensors and Switches	144
....3.21.02. Sensors and switch control	145
4 Mechanical Disassembly and Reassembly	
4.1 General	146
....4.1.2 Tools	147
4.2 How to Disassemble and Reassemble	148
....4.2.1 LED Print Head	149
....4.2.2 Image Drum, Rear Cover, NCU Cover, Main Cover, Separation Plate, NCU Board, Modem Board	150
....4.2.3 Control Panel Assembly, Paper Guide (U) Assembly.	151
....4.2.4 Sub-roller, ADF Roller Assembly, Pinch Roller, Contact Image Sensor, Document Detectors (PC1 and PC2).	152
....4.2.5 Registration Stepper Motor, Main Stepper Motor, release Guide Assembly, Eject Roller Assembly, Manual Guide Assembly (only for OKIFAX 2350/2450), Stack Cover, Fusing Unit	153

Table of Contents	Page
....4.2.6 Lower Base, Motor Assembly, Back-up Roller, Transfer Roller, Reset Levers	154
....4.2.7 Registration Roller, Hopping Roller, Sensor Plates	155
....4.2.8 MCNT Board, Power Supply Unit, Contact Assembly, Transformer	156
5 Adjustments	
5.1 Setting of LED Print Head Drive Time	157
5.2 Power Voltage (Confirmation)	158
5.3 Contact Image Sensor Output Check (Confirmation)	159
6 Cleaning and Maintenance	
6.1 Replacement of Consumable Parts	160
6.2 Preventative Maintenance	161
6.3 Printer Counter Display/Clear	162
6.4 Printer Counter Display/Clear	163
6.5 Self-diagnosis Test	164
6.6 Sensor Calibration Test	165
6.7 LED Test	166
6.8 Tone Send Test	167
6.9 High-speed Modem Send Test	168
6.10 High-speed Modem Receive Test	169
6.11 MF Send Test	170
6.12 Tone (TEL/FAX)	171
6.13 Printer Cleaning	172
6.14 Protocol Dump Data Printing	173
....6.14.02 Procedure	174
....6.14.03 Dump data description	175
....6.14.04 Analysis from the data	176
....6.14.05 FCF (Facsimile Control Field) conversion table	177
6.15 System Reset	178
6.16 Service Code	179
7 Troubleshooting and Repair	
General	180
7.1 Overall Troubleshooting Flow Chart	181
7.2 No LCD Operation	182
7.3 ALARM LED ON	183
7.4 Printing Test Failure	184
7.5 No Local Copy	185
7.6 Auto Dial Failure	186
7.7 Transmission Problem	187
7.8 Auto Reception Failure	188
7.9 Reception Problem	189
7.10 Scan Calibration Test Failure	190
7.11 LED Test	191
7.12 Tone Send Test	192

Table of Contents	Page
7.13 High-speed Modem Test	193
7.14 MF Send Test	194
7.15 Tone (TEL/FAX) Send Test	195
7.16 No Acoustic Line Monitor	196
7.17 Power Supply Unit	197
7.18 No Document Feeding	198
7.19 Multiple Document Feeding	199
7.20 Document Skew	200
7.21 Document Jam	201
7.22 Printer Unit	202
....7.22.2 Troubleshooting Flow Chart of Printer Unit	203
.....Troubleshooting flow chart 1:	204
.....Troubleshooting flow chart 2:	205
.....Troubleshooting flow chart 3:	206
.....Troubleshooting flow chart 4:	207
.....Troubleshooting flow chart 5:	208
.....Troubleshooting flow chart 6:	209
.....Troubleshooting flow chart 7:	210
.....Troubleshooting flow chart 8:	211
.....Troubleshooting flow chart 9:	212
.....Troubleshooting flow chart 10:	213
.....Troubleshooting flow chart 11:	214
.....Troubleshooting flow chart 12:	215
.....Troubleshooting flow chart 13:	216
.....Troubleshooting flow chart 14: Troubleshooting flow chart 15:	217
8 Drawings and Parts List	
ASSEMBLY - OKIFAX 1050	218
ASSEMBLY - OKIFAX 2350/2450	219
SECTION 1 CABINET ASSEMBLY - OKIFAX 1050	220
SECTION 1 CABINET ASSEMBLY - OKIFAX 2350/2450	221
SECTION 2 CONTROL ASSEMBLY - OKIFAX 1050	222
SECTION 2 CONTROL ASSEMBLY - OKIFAX 2350	223
SECTION 2 CONTROL ASSEMBLY - OKIFAX 2450	224
SECTION 3 PRINTER ASSEMBLY - OKIFAX 2350/2450	225
SECTION 3 PRINTER ASSEMBLY - OKIFAX 1050	226
SECTION 4 BASE ASSEMBLY - OKIFAX 1050	227
SECTION 4 BASE ASSEMBLY - OKIFAX 2350/2450	228
SECTION 5 SCAN UNIT - OKIFAX 1050/2350/2450	229
SECTION 6 PAPER ASSEMBLY - OKIFAX 1050/2350/2450	230
SECTION 7 CABLES - OKIFAX 1050	231
SECTION 7 CABLES - OKIFAX 2350/2450	232
Section 8: Packaging	233
9 High Capacity Second Paper Feeder Maintenance	

Table of Contents	Page
PREFACE	234
9.1 Outline	235
9.2 Mechanism Description	236
9.3 PARTS REPLACEMENT	237
....9.3.2 Parts Layout	238
....9.3.3 Parts Replacement Methods	239
.....9.3.3.1. Pulse Motor (Hopping)	240
.....9.3.3.2. TQSB-PCB	241
9.4 Troubleshooting	242
9.5 Connection Diagram	243
....9.5.2 PCB Layout	244
9.6 Parts List	245

Federal Communications Commission Requirements for End Users

This device has been granted a registration number by the Federal Communications Commission, under Part 68 rules and regulations for direct connection to the telephone lines. In order to comply with these FCC rules, the following instructions must be carefully read and applicable portions followed completely.

1. This equipment complies with Part 68 of FCC rules. On the bottom of the equipment is a label that contains, among other information, the FCC registration number and ringer equivalence number (REN) for this equipment. If requested, this information must be provided to the telephone company.

2. The following USOC jacks may be used with this equipment: RJ11C.

3. The REN is used to determine the quantity of devices which may be connected to the telephone line. Excessive RENs on the telephone line may result in the devices not ringing in response to an emergency call. In most, but not all areas, the sum of the RENs should not exceed five (5.0). To be certain of the number of devices that may be connected to the line, as determined by the total RENs, contact the tele-phone company to determine the maximum REN for your calling area.

4. If the equipment causes harm to the telephone network, the telephone company will notify you in advance. But if advance notice isn't practical, the telephone company will notify the customer as soon as possible. Also, you will be advised of your right to file a complaint with the FCC if you believe it is necessary.

5. The telephone company may make changes in its facilities, equipment, operations, or procedures that could affect the operation of the equipment. If this happens, the telephone company will provide advance notice in order for you to make the necessary modifications to maintain uninterrupted service.

6. If trouble is experienced with this equipment, please contact the following for repair and/or warranty information:

OKIDATA 532 Fellowship Rd. Mount Laurel, NJ 08054-3405 Telephone: (609) 235-2600 or 1-(800)-OKIDATA

If the trouble is causing harm to the telephone network, the telephone company may request that you remove the equipment from the network until the problem is resolved.

7. This equipment contains no user serviceable parts. Please contact OKIDATA for service.

8. This equipment cannot be used on public coin service provided by the telephone company. Connection to Party Line Service is subject to state tariffs. Contact your state Public Utility Commission, Public Service Commission, or Corporate Commission for information.

9. This equipment is hearing-aid compatible.

Copyright 1997, Okidata, Division of OKI America, Inc. All rights reserved. See the OKIDATA Business Partner Exchange (BPX) for any updates to this material. (http://bpx.okidata.com)

FCC Telephone Consumer Protection Act

The Federal Communications Commission Telephone Consumer Protection Act of 1991 makes it unlawful for any person to use a computer or other electronic device to send any message via a telephone fax machine unless such message clearly contains, in a margin at the top or bottom of each transmitted page or on the first page of the transmission, the date and time it is sent and an identification of the business or other entity, or other individual sending the message, and the telephone number of the sending machine or such business, other entity, or individual.

To comply with this law, you must enter the following information in your fax unit:
• Date and time • Name and telephone number which identify the source of your fax transmission

Copyright 1997, Okidata, Division of OKI America, Inc. All rights reserved. See the OKIDATA Business Partner Exchange (BPX) for any updates to this material. (http://bpx.okidata.com)

Canadian Department of Communications Requirements for End Users

The Canadian Department of Communications label identifies certified equipment. This certification means that the equipment meets certain telecommunications network protective, operational and safety requirements. The Department does not guarantee the equipment will operate to the users satisfaction. Before installing this equipment, users should ensure that it is permissible to be connected to the facilities of the local telecommunications company. The equipment must also be installed using an acceptable method of connection. In some cases, the company's inside wiring associated with a single line individual service may be extended by means of a certified connector assembly (telephone extension cord). The customer should be aware that compliance with the above conditions may not prevent degradation of service in some situations. Repairs to certified equipment should be made by an authorized Canadian maintenance facility designated by the supplier.

Any repairs or alterations made by the user to this equipment, or equipment malfunctions, may give the telecommunications company cause to request the user to disconnect the equipment. Users should ensure for their own protection that the electrical ground connections of the power utility, telephone lines and internal metallic water pipe system, if present, are connected together. This precaution may be particularly important in rural areas.

Users should not attempt to make such connections themselves, but should contact the appropriate electric inspection authority, or electrician, as appropriate. The Load Number assigned to each terminal device denotes the percentage of the total load to be connected to a telephone loop which is used by the device, to prevent overloading. The termination of a loop may consist of any combination of devices subject only to the requirement that the total of the Load Numbers of all the devices does not exceed 100.

Letiquette du Ministere des Communications du Canada identifie le materiel homologue. Cette etiquette certifie que le materiel est conforme a certaines normes de protection, dexploitation et de securite des reseaux de telecommunications. Le Ministere nassure toutfois pas que le materiel fonctionnera a la satisfaction de lutilisateur.

Avant dinstaller ce materiel, lutilisateur doit sassurer qull est permis de le raccorder aux installations de lentreprise locale de telecommunication. Le materiel doit egalement etre installe en suivant une method acceptee de raccordement. Dans certains cas, les fils interieurs de lentreprise utilises pour un service individuel a ligne unique peuvent etre prolonges au moyen dun dispositif homologue de raccordement (cordon prologateur telephonique interne). Labonne ne doit pas oublier quil est possible que la conformite aux conditions enoncees ci-dessus nempechent pas la degradation du service dans certaines situations. Actuellement, les entreprises de telecommunication ne permettent pas que lon raccorde leur materiel a des jacks dabonne, sauf dans les cas precis prevus par les tarrifs particuliers de ces entreprises.

Les reparations de materiel homologue doivent etre effectuees par un centre dentretien canadien autorise designe par le fournisseur. La compagnie de telecommunications peut demander a lutilisateur de debrancher un appareil a la suite de reparations ou de modifications effectuses par lutilisateur ou a cause de mauvais fonctionnement.

Pour sa propre protection, lutilisateur doit sassurer que tous les fils de mise a la terre de la source denergie electrique, des lignes telephoniques et des canalisations deau metalliques, sil y en a, sont raccordes ensemble. Cette precaution est particulierement importante dans les regions rurales. Avertissement: Lutilisateur ne doit pas tenter de faire ces raccordements lui-meme; il doit avoir recoursa un service dinspection des installations electriques, ou a electricien, selon le cas.

Lindice de charge (IC) assigne a chaque dispositif terminal indique, pour eviter toute surcharge, le pourcentage de la charge totale qui peut etre raccordee a un circuit telephonique boucle utilise par ce dispositif. La terminaison du circuit boucle peut etre constituee de nimport quelle combinaison de dispositifs, pourvu que la somme des indices de charge de lensemble des dispositifs ne depasse pas 100.

Copyright 1997, Okidata, Division of OKI America, Inc. All rights reserved. See the OKIDATA Business Partner Exchange (BPX) for any updates to this material. (http://bpx.okidata.com)

Federal Communications Commission Radio Frequency Statement

This equipment has been tested and found to comply with the limits for a Class B digital device, pursuant to Part 15 of the FCC Rules. These limits are designed to provide reasonable protection against harmful interfer-ence in a residential installation. This equipment generates, uses, and can radiate radio frequency energy and, if not installed and used in accordance with the instructions, may cause harmful interference to radio communica-tions. However, there is no guarantee that interference will not occur in a particular installation. If this equip-ment does cause harmful interference to radio or television reception, which can be determined by turning the equipment off and on, the user is encouraged to try to correct the interference by one or more of the following measures:

• Reorient or relocate the receiving antenna.

• Increase the separation between the equipment and receiver.

• Connect the equipment into an outlet on a circuit different from that to which the receiver is connected.

• Consult the dealer or an experienced radio/TV technician for help.

Changes or modifications not expressly approved by Okidata may void your authority to operate this device.

Copyright 1997, Okidata, Division of OKI America, Inc. All rights reserved. See the OKIDATA Business Partner Exchange (BPX) for any updates to this material. (http://bpx.okidata.com)

Canadian Department of Communications Radio Interference Statement

This apparatus complies with the Class A limits for radio interference as specified in the Canadian Department of Communications Radio Interference Regulations.

Cet appareil est conforme aux normes Class A dinterference radio tel que specifier par le Ministere Canadien des Communications dans les Reglements DInterference Radio.

Copyright 1997, Okidata, Division of OKI America, Inc. All rights reserved. See the OKIDATA Business Partner Exchange (BPX) for any updates to this material. (http://bpx.okidata.com)

1.1 General Performance

1.1.01 Style
Desktop

1.1.02 Applicable lines
General switched telephone network (GSTN)
Private branch exchange (PBX)

1.1.03 Compatibility
ITU-T Group 3 facsimile transceiver

1.1.04 Document width
Max. 8.5" (216 mm) (NA Letter)
Min. 5.8" (148 mm) (ISO A5 size)

1.1.05 Effective reading width
Max. 8.46" (215 mm)

1.1.06 Scanning length
5" (128 mm) to 14" (356 mm)
(Length setting: Infinite is also available.)

1.1.07 Automatic document feeder (ADF)
30 sheets (NA Letter/A4-size: 20-1b bond. OKIDATA recommended paper)
15 sheets (NA Letter/A4-size: 13 to 28-1b bond)

Note: NA is North America

1.1.08 Recording paper or sheet
First cassette: NA Letter/NA Legal/A4-size plain paper cut 250 sheets capacity (20-1b bond*)

Second cassette (Option): NA Letter/NA Legal/A4-size plain paper cut (OKIFAX 2350/2450) 500 sheets capacity (20-1b bond*) Manual loading feeder: Transparency for overhead projector, applicable. (OKIFAX 2350/2450) Sheet size: NA Letter/NA Legal/A4-size
* OKIDATA recommended paper

1.1.09 Printable width
NA Letter: 8.2" (208 mm) (8.0" (203.2 mm) for assured quality)
NA Legal: 8.2" (208 mm) (8.0" (203.2 mm) for assured quality)
ISO A4: 8.1" (206 mm) (7.77" (197.3 mm) for assured quality)

1.1.10 Printable length
NA Letter: 10.76" (273.3 mm) (10.5" (266.7 mm) for assured quality)
NA Legal: 13.76" (349.5 mm) (13.5" (342.9 mm) for assured quality)
ISO A4: 11.46" (291 mm) (11.19" (284.3 mm) for assured quality)

1.1.11 Copy stacker
Max. 100 sheets (20-lb bond)

* Okidata recommended paper

1.1.12 Scanning resolution
Horizontal: 8 pel/mm
Vertical: Transmission mode: 3.85 line/mm (STD) (200 x 100 LPI) 7.7 line/mm (FINE) (200 x 200 LPI) 15.4 line/mm (EX. FINE) (200 x 400 LPI) COPY mode: 7.7 line/mm (200 x 200 LPI)

1.1.13 Scanning method
NA Letter (1728-bit) contact image sensor

1.1.14 Recording resolution
Horizontal: 8 pel/mm
Vertical:
Variable: Automatically adjusted to the paper length. STD mode: 3.85 to 5.06 line/mm FINE, COPY mode: 7.7 to 10.13 line/mm Fixed: 3.85 line/mm (STD) 7.7 line/mm (FINE, COPY)

1.1.15 Recording method
NA Letter size (1728-bit) LED print head

1.1.16 Minimum scan line time for receiving
When receiving from OKIFAX: 0 ms
When receiving from non-OKIFAX: 10 ms at 3.85 line/mm 5 ms at 7.7 line/mm

1.1.17 Print speed Max.
4 sheets per minute (OKIFAX 1050)
Max. 8 sheets per minute (OKIFAX 2350/2450)

1.1.18 Pre-heating time
No pre-heating mode

1.1.19 Coding scheme
Modified Huffman (MH)
Modified READ (MR)
Modified Modified READ (MMR)

1.1.20 Modem
ITU-T Rec. V.29: 9600/7200 bps (OKIFAX 1050/2350/2450)
ITU-T Rec. V.27 ter: 4800/2400 bps (OKIFAX 1050/2350/2450)
ITU-T Rec. V.21 channel 2: 300 bps (OKIFAX 1050/2350/2450)
ITU-T Rec. V.17: 14400/12000 bps (OKIFAX 2350/2450; option)
ITU-T Rec. V.33: 14400/12000 bps (OKIFAX 2350/2450; option)

1.1.21 Transmission speed
9 sec. per sheet of ITU-T No. 1 sample document
6 sec. per sheet of ITU-T No. 1 sample document

Note: This is Phase C time at STD/Resolution and 14400 bps for 6 sec. and 9600 bps for 9 sec. in MMR code transmission.

1.1.22 Protocol
ITU-T Rec. T.30
OKI special protocols: High-speed protocol

1.1.23 Error correction mode (ECM)

1.1.24 Communication mode

Half duplex

1.1.25 Memory capacity

Basic model: 256 k-byte (OKIFAX 1050/2350) 512 k-byte (OKIFAX 2450)

Optional memory: One of 512 k-byte or 1 M-byte memory board can be added. (OKIFAX 1050) One of 512 k-byte, 1M-byte or 2 M-byte memory board can be added. (OKIFAX 2350/2450)

Note: For OKIFAX 1050, choose either memory board or PC I/F board.

1.1.26 Liquid crystal display (LCD)

Two rows of 20 characters for operation guidance, check and various kinds of information

1.1.27 Power source

Nominal input voltage 120 VAC

Copyright 1997, Okidata, Division of OKI America, Inc. All rights reserved. See the OKIDATA Business Partner Exchange (BPX) for any updates to this material. (http://bpx.okidata.com)

1.2 General User's Function

1.2.01 Transmit mode
- Automatic transmit mode
- Manual transmit mode

1.2.02 Receive mode
- Automatic receive mode
- Manual receive mode
- TEL/FAX automatic switchover mode
- TAD mode
- PC-I/F mode (option)

1.2.03 Dual access (OKIFAX 2350/2450)

1.2.04 Voice request

1.2.05 Automatic redial

1.2.06 Last number redial (Manual redial)

1.2.07 Local copy including multiple copies

1.2.08 Sender identification (Sender ID)

1.2.09 Personal identification (Personal ID)

1.2.10 Polling transmission

1.2.11 Polling reception

1.2.12 Acoustic line monitor

1.2.13 Telephone handset (option)

1.2.14 Automatic alternate call selecting (FAX No. + an alternate FAX No. can be registered in one-touch keys).

1.2.15 Delayed transmission (Max. 3 days)
- Delayed broadcast (OKIFAX 2350/2450)
- Delayed transmission OKIFAX 1050: 5 specified times
  OKIFAX 2350/2450: 5 specified times

1.2.16 Relay broadcast initiate

1.2.17 Confidential message transmission (Hopper (FEEDER TRANSMIT), 1 station)

1.2.18 Confidential message reception (Memory)
- OKIFAX 1050: 1 mail box

OKIFAX 2350: 8 mail boxes
OKIFAX 2450: 16 mail boxes

1.2.19 PHOTO mode
OKIFAX 1050: 16 scale gradations
OKIFAX 2350: 32 scale gradations
OKIFAX 2450: 64 scale gradations

1.2.20 G3 sequential broadcast (Memory)
Broadcast mode
OKIFAX 1050 (55 stations at maximum)
OKIFAX 2350 (84 stations at maximum)
OKIFAX 2450 (134 stations at maximum)
Delayed broadcast mode

1.2.21 No paper/no toner reception

1.2.22 Memory-only reception (OKIFAX 2350/2450)
(Memory reception even if paper does not run out)

1.2.23 Automatic image/text separation (PHOTO mode)

1.2.24 Page re-transmission (Only in memory TX mode)

1.2.25 Automatic variable reduction printing (Reduction rate is from 100% to 75%.) (Legal to Letter)

1.2.26 Image Smoothing printing (In STANDARD and FINE resolutions)

1.2.27 Programmed key operation ("F" key + "OT" key)

1.2.28 Auto dialing

One-touch dialing	OKIFAX 1050: 10 locations
	OKIFAX 2350: 15 locations
	OKIFAX 2450: 30 locations
Two-digit automatic dialing	
	OKIFAX 1050: 40 locations
	OKIFAX 2350: 64 locations
	OKIFAX 2450: 99 locations

Manual Dialing in Broadcast: Up to 5 locations
Keypad dialing
Chain dialing
Mixed dialing

Group dialing	OKIFAX 1050: 5 dialing groups
	OKIFAX 2350: 10 dialing groups
	OKIFAX 2450: 20 dialing groups

1.2.29 Realtime dialing

1.2.30 Automatic pause signal insertion

1.2.31 Manual feeder local copy (OKIFAX 2350/2450)

1.2.32 Telephone directory (Alpha search) dialing

1.2.33 TEL/FAX automatic switching

1.2.34 Time and date printing (RX mode)

1.2.35 Closed user group (Direct mail rejection)

1.2.36 Transmission contrast and resolution control

1.2.37 Key touch tone

1.2.38 Printer counter display (For drum, toner, total print)

1.2.39 Total page counter (scan)

1.2.40 Quick scanning (OKIFAX 2350/2450) 6 sec. minimum ® A4 size, STANDARD resolution

Note: Not available in OKIFAX 1050.

1.2.41 Date and clock adjustment

1.2.42 PC interface (option)

1.2.43 Language selection 2 languages (LCD)

1.2.44 Reports

Activity report
Protocol report (Technical Function)
Message confirmation report (Single or multiple addresses)
Memory entry report (Broadcast)
Transmission error report
Confidential reception report (Personal mailbox RX report)
Configuration report
Telephone directory
Power off report

Copyright 1997, Okidata, Division of OKI America, Inc. All rights reserved. See the OKIDATA Business Partner Exchange (BPX) for any updates to this material. (http://bpx.okidata.com)

1.3 General Maintenance Functions

1.3.01 Self-diagnosis FLASH memory check RAM check RAM check (MEMORY board: option) Print test

1.3.02 Scan calibration (Adjustment of scanning level)

1.3.03 LED test

1.3.04 Tone send test

1.3.05 Multi-frequency (MF) send test

1.3.06 High-speed modem send test

1.3.07 High-speed modem receive test

1.3.08 Tone (TEL/FAX) test

1.3.09 Printer cleaning function

1.3.10 Remote diagnosis (using RMCS software)

1.3.11 System reset

1.3.12 Service default report (Technical function settings for service engineer)

Copyright 1997, Okidata, Division of OKI America, Inc. All rights reserved. See the OKIDATA Business Partner Exchange (BPX) for any updates to this material. (http://bpx.okidata.com)

1.4 General Appearance

Figure 1.4.1 shows the general appearance of the OKIFAX 1050/2350/2450.
Figure 1.4.2 shows the control panel of the OKIFAX 1050.
Figure 1.4.3 shows the control panel of the OKIFAX 2350.
Figure 1.4.3 shows the control panel of the OKIFAX 2450.

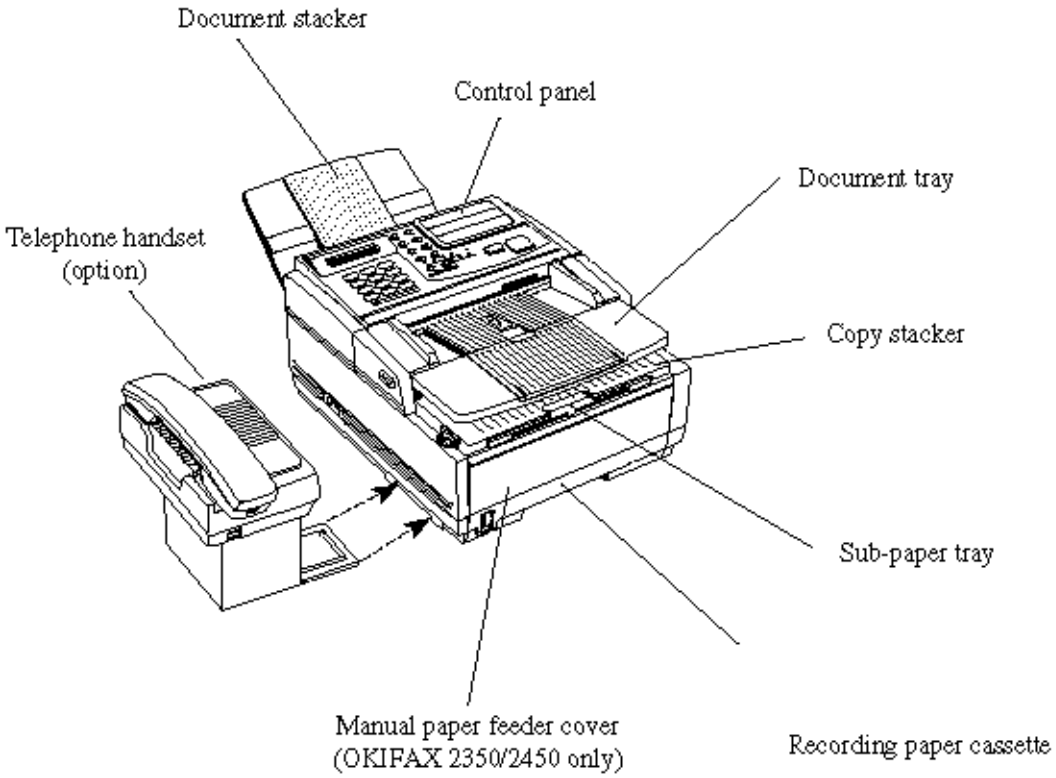

Figure 1.4.1 General Appearance of OKIFAX 1050/2350/2450

Copyright 1997, Okidata, Division of OKI America, Inc. All rights reserved. See the OKIDATA Business Partner Exchange (BPX) for any updates to this material. (http://bpx.okidata.com)

Figure 1.4.2 OKIFAX 1050 Control Panel

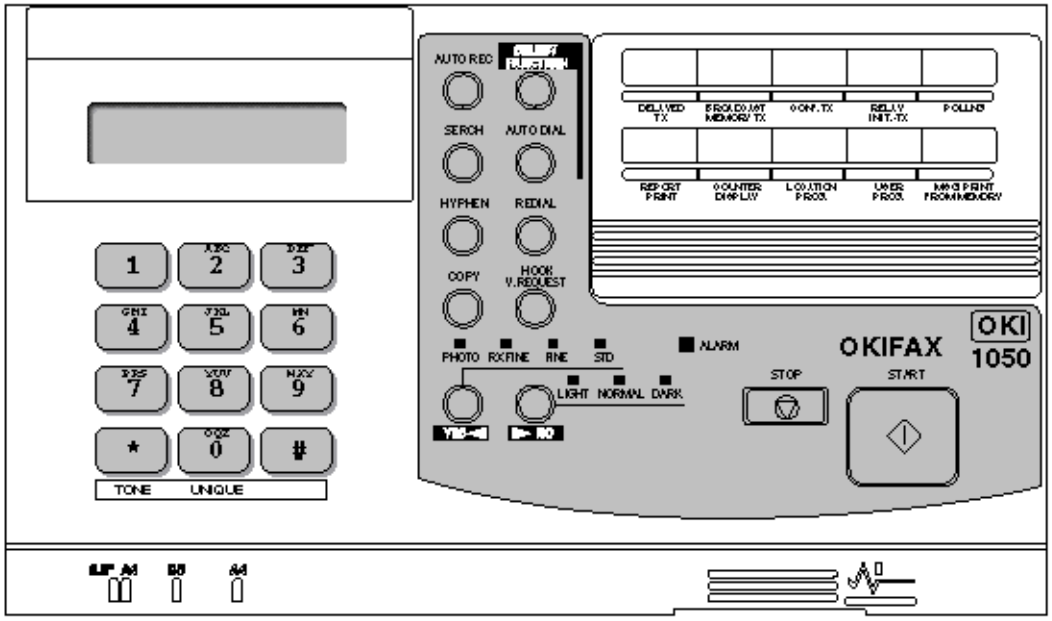

Copyright 1997, Okidata, Division of OKI America, Inc. All rights reserved. See the OKIDATA Business Partner Exchange (BPX) for any updates to this material. (http://bpx.okidata.com)

Figure 1.4.3 OKIFAX 2350 Control Panel

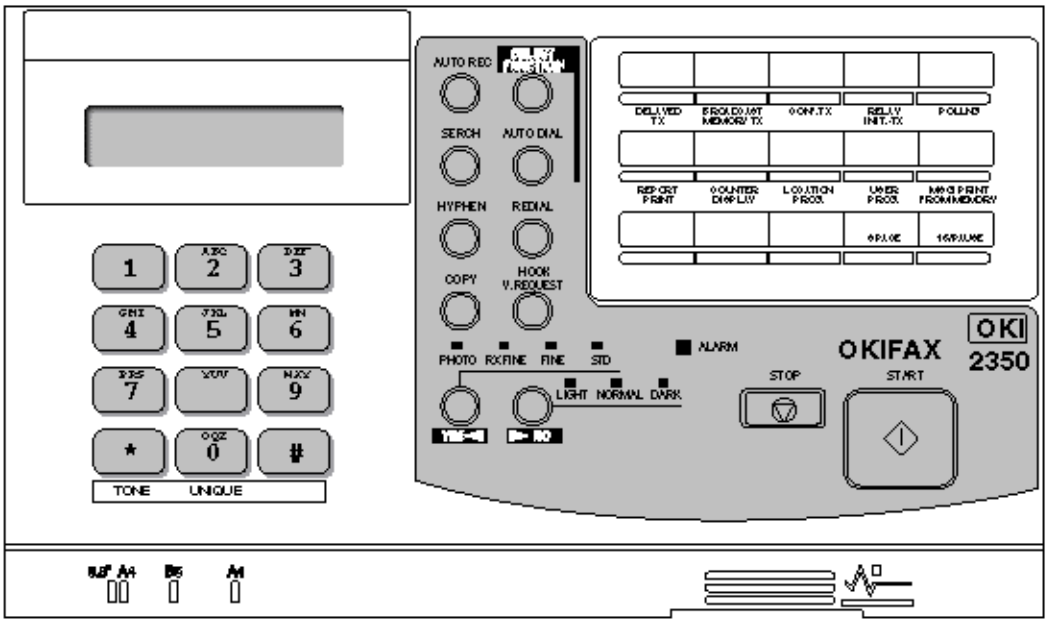

Copyright 1997, Okidata, Division of OKI America, Inc. All rights reserved. See the OKIDATA Business Partner Exchange (BPX) for any updates to this material. (http://bpx.okidata.com)

Figure 1.4.4 OKIFAX 2450 Control Panel

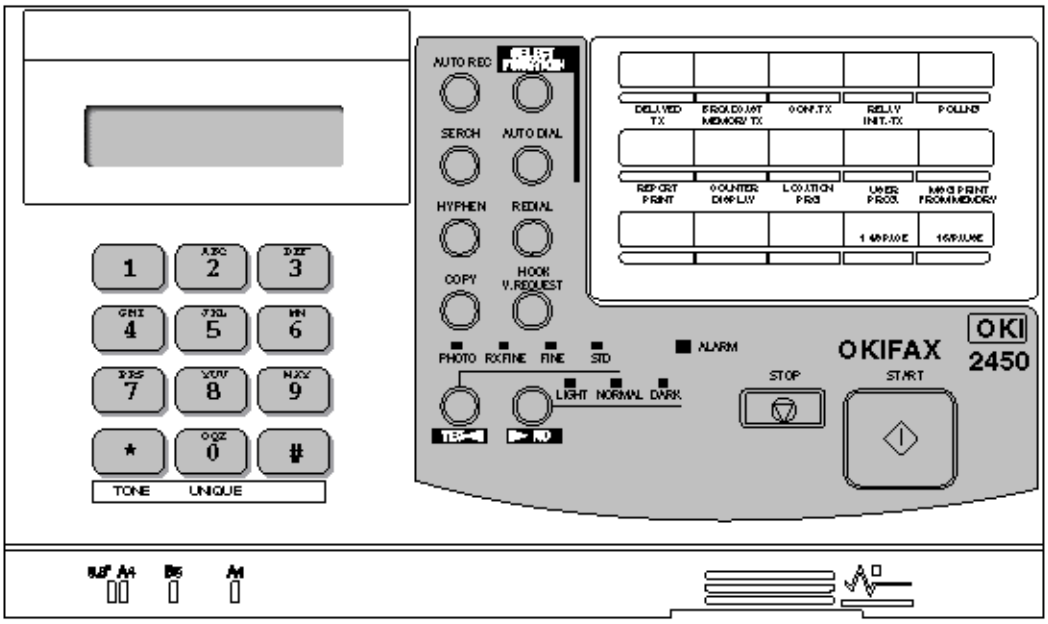

Copyright 1997, Okidata, Division of OKI America, Inc. All rights reserved. See the OKIDATA Business Partner Exchange (BPX) for any updates to this material. (http://bpx.okidata.com)

1.5 Basic Performance Specifications

Table 1.5.1 shows basic performance specifications.

Note:
TF: Technical function setting
FP: Function program setting
OT: One-touch key pressed
F: SELECT FUNCTION key pressed

Table 1.5.1 (1/10) Basic Performance Specifications

No.	No.	Item	Specifications
1	Applicable line		1) General switched telephone network (GSTN) 2) Private branch exchange (PBX) (OT9+2)
2	Line interface		
	1) Impedance		600W balanced
3	Type of document to be transmitted		
	1) Width		Max. 8.5" (216 mm) (NA Letter) Min. 148 mm (ISO A5 size) **Note**: Effective reading width is NA Letter (215 mm).
	2) Length		Min. 5" (128 mm) Max. 14" (356 mm) Long document detection: 14" (356 mm), or 60 minutes *TF + 06 (To enable or disable the long document scanning) An operator can turn the long document scanning feature on or off for each call in the operating sequence.
	3) Thickness		Based on common bond paper, a) 0.08 to 0.13 mm for multiple page feeding b) 0.06 to 0.15 mm for single page feeding
	4) Shape		Rectangular
	5) Opacity		Documents allowing less than 40% of the scanner source light to pass through them.
4	Effective reading width		

Document width	Communication Mode/Paper width	Effective reading width	Copy size
ISO A4 (210 mm) [INT'L/FTZ]	G3/A4	8.2" (208 mm)	A4
NA letter (216 mm) [US/CANADA]	G3/A4	8.46" (215 mm)	Letter
NA legal (216 mm) [US/CANADA]	G3/A4	8.46" (215 mm)	Legal

5 Automatic document feeder (ADF) Up to 11.7" (297 mm) in length. Max. 30 documents:
NA Letter or A4 (20-1b) Max. 15 documents:
NA Letter or A4 (13-28lb bond paper)
Documents shall be placed facedown on ADF stacker. The first sheet will be fed first in the feeder and will exit facedown in the document stacker.

6 Document skew Max. 2.6 mm skew over a document of 11.7" (A4) length.
For a document longer than 11.7" (A4) length, occurrence of skew exceeding 2.6 mm over any 11.7" (A4) length is 0.5% or less.

7 Document jam detection 1) Transmission will stop and line disconnection will occur when the end of a document is not detected within 14" (356 mm) after scanning begins (except for the long document scanning. TF + 06)

2) A jam will also be declared if the document does not reach the scanning position within 5.5 seconds (OKIFAX 2350/2450)/10 seconds (OKIFAX1050) after the start of a document feed.

Note: When a jam is detected during message transmission from the feeder, the machine will stop scanning and disconnect the line, but its receiving capability will remain valid.

8 Manual release

9 Recording paper or sheet For the first or second recording paper cassette:
1) Type: Plain paper cut (Bond paper)

2) Size: ISO A4 8.26" x 11.7" (210 mm x 297 mm)
NA Letter 8.5" x 11" (215.9 mm x 279.4 mm)
NA Legal 8.5" x 14" (215.9 mm x 355.6 mm)

3) Weight: 16 lbs to 24 lbs/base weight

Base weight is defined as the weight of 500 sheets of 17" x 22" (431.8 mm x 558.8 mm).

4) Thickness: 0.08 mm to 0.12 mm

5) Condition: New paper

For the manual loading feeder on the OKIFAX 2350/2450

1) Type: Plain paper, transparency for overhead projector, colored paper, printed paper

2) Size: A4/NA Letter/NA Legal

3) Weight, thickness and condition: Same as above

Note: One single sheet only should be loaded on the manual loading feeder at a time.

For best results use OKI DATA recommended papers

1) Xerox 4200 (20 - lb/base weight paper)

2) L-type paper for photo-printers

10 Recording paper cassette

1) First cassette	250 sheets/cassette (Okidata recommended paper)
2) Second cassette (Option)	500 sheets/cassette (Okidata recommended paper)
(For OKIFAX 2350/2450)	The fax can discharge printed copies and stack them facedown.
	Maximum sheets on the copy stacker: 100*

11 Effective recording area

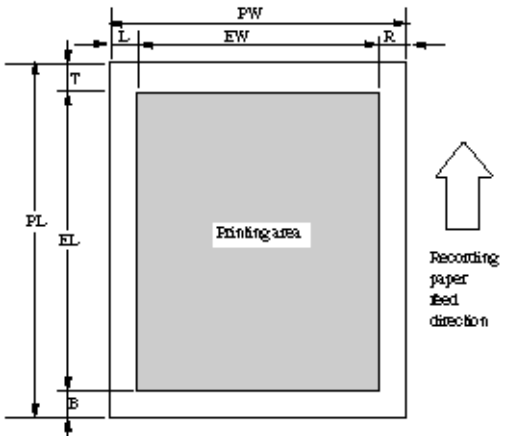

Note: These tables do not include vertical and horizontal addressing

deviations (+ or 2 mm) of recording
paper.feed direction

1) Printable area

	NA	LETTERSIZE	ISO A4	SIZE	NA LEGAL	SIZE
	inch	mm	inch	mm	inch	mm
PL	11	279.4	11.7	297	14	355.6
PW	8.5	215.9	8.3	210	8.5	215.9
EL	10.76	273.3	11.46	291	13.76	349.5
EW	8.18	208	8.11	206	8.18	208
T	0.12	3	0.12	3	0.12	3
B	0.12	3	0.12	3	0.12	3
L	0.16	3.95	0.09	2	0.16	3.95
R	0.16	3.95	0.09	2	0.16	3.95

	NA	LETTERSIZE	ISO A4	SIZE	NA LEGAL	SIZE
	inch	mm	inch	mm	inch	mm
PL	11	279.4	11.7	297	14	355.6
PW	8.5	215.9	8.3	210	8.5	215.9
EL	10.5	266.7	11.19	284.3	13.5	342.9
EW	8	203.2	7.77	197.3	8	203.2
T	0.25	6.35	0.25	6.35	0.25	6.35
B	0.25	6.35	0.25	6.35	0.25	6.35
L	0.25	6.35	0.25	6.35	0.25	6.35
R	0.25	6.35	0.25	6.35	0.25	6.35

12	Copy stacking	* Okidata recommended paper (20lb)
13	Scanning resolution	Horizontal: 8 pel/mm
		Vertical: Transmission mode: 3.85 line/mm (STD), 7.7 line/mm (FINE) or 15.4 line/mm (EX. FINE)
	Copy mode:	7.7 line/mm

14	Image scanning method	NA Letter size (1728-bit) contact image sensor
15	Contrast control	1) Automatic background sensing A continuous document background of 0.3 OD (optical density) or less will be transmitted as white. 2) The LIGHT and DARK contrasts will automatically be adjusted to improve image quality.
16	Recording resolution	Horizontal: 8 dot/mm Vertical: Fixed: 3.85 line/mm (200 x 100 LPI) (STD) 7.7 line/mm (200 x 200 LPI) (FINE, COPY)
17	Recording system	Electro-photographic printing A4 size (1728-bit) LED print head
18	Skew of recording paper	Maximum allowable skew is + or - 1 mm over an advance of 3.93" (100 mm.)
19	Copy darkness	1) Black image: Greater than 1.0 OD (Optical density) 2) White background: Not greater than 0.2 OD (Optical density)
20	Copy uniformity	Printed copies will exhibit a uniform density of the printed and background area: 1) From edge to edge: 25% unit 2) From copy to the next copy: 30% unit
21	Recording paper running out	The fax can detect the no-paper condition by a photosensor. When the paper has run out in the local copy operation, the scanning will stop with "NO PAPER ... REPLACE PAPER" on the LCD, and an ALARM LED turns on without an alarm tone. When the paper has run out while a message is being received and the no-paper reception is activated, the LCD display will show "MSG. IN MEMORY", and the ALARM LED turns on.
22	Minimum scan line time	0 ms, when receiving from an OKIDATA for receiving facsimile. 5 ms at 7.7 line/mm and 10 ms at 3.85 line/mm when receiving from a non-OKIDATA facsimile.
23	Coding scheme	1) One-dimensional coding scheme: Modified Huffman (MH) 2) Two-dimensional coding scheme: Modified READ (MR)

Modified modified READ (MMR)

24 MODEM

1) High-speed MODEM
a) ITU-T Rec. V.29 (9600/7200 bps)
b) ITU-T Rec. V.27 ter (4800/2400 bps)
c) ITU-T Rec. V.17 (14400/12000/9600/7200 bps); OKIFAX 2450, OKIFAX 2350 (option)
d) ITU-T Rec. V.33 (14400/12000 bps); OKIFAX 2450, OKIFAX 2350 (option)

2) Low-speed MODEM
ITU-T Rec. V.21 channel 2 (300 bps)

25 Fallback
Automatic fallback will occur according to the following sequence by FTT, RTN or PPR.

Fallback rank	Transmission speed	Activated by FTT (Times)	Activated by RTN (Times)	Activated by PPR (Times)	Protocol
1st	14400 bps	1	1	4 (Note 1)	ITU-T V.17 (V.33)
2nd	12000 bps	1	1	4 (Note 1)	ITU-T V.17 (V.33)
3rd	9600 bps	1	1	4 (Note 1)	ITU-T V.17 (V.29)
4th	7200 bps	1	1	4 (Note 1)	ITU-T V.17 (V.29)
5th	4800 bps	2	1	4 (Note 1)	ITU-T V.27 ter.
6th	2400 bps	2	1	4 (Note 1)	ITU-T V.27 ter.

When the last trial fails, the transmitting station sends out a DCN signal to the remote station for disconnection.

Note 1: Continuous PPRs for the same partial page within each fallback rank.

26 Protocol
1) ITU-T Rec. T.30

2) OKIDATA special protocol high-speed protocol
The T.30 protocol signal from the transmitting station is sent at message transmission speed instead of 300 bps.

Note: In high-speed protocol, 14.4 and 12 K-bps are not applied.

27 Transmission time
6 sec./ITU-T No. 1 sample document (OKIFAX 2350/2450, option)

9 sec./ITU-T No. 1 sample document (OKIFAX 1050/2350)

Note: This is Phase C time at 3.85 line/mm and 14400 bps for 6 sec. and 9600 bps for 9 sec. in MMR code transmission.

28 Error correction — ITU-T Error correction mode (ECM)
OKIDATA ITU-T ECM

29 Communication mode — Half-duplex

30 Ringing signal detection sensitivity

1) Voltage range — 25 to 150 V r.m.s.
Inoperative below 10 V

2) Frequency range — 20 to 68 Hz

3) Ring response time — One-ringing signal or 5 to 30 seconds.
(Selectable in 5 sec. steps. F + OT9 + ¬ + 15)

31 Image memory

	Basic model	**Optional memory**
OKIFAX 1050	256K-byte	512K-byte/1M-byte
OKIFAX 2350	256K-byte	512K-byte/1M-byte/2M-byte
OKIFAX 2450	OKIFAX 2450 512K-byte	512K-byte/1M-byte/2M-byte

	Memory condition	**OKIFAX 1050 [pages]**	**OKIFAX 2350 [pages]**	**OKIFAX 2450 A4 Setting [pages]**	**OKIFAX 2450 LEGAL Setting [pages]**
With	Standard (without option)	17	17	35	27
option	0.5M-byte	56	56	79	70
	1M-byte	100	100	120	110
board	2M-byte		180	200	195

Note: No. of sheets is counted provided that ITU-T No.1 sample documents are used.

Note*:* Back-up time on electrical interruption: Min. one hour (OKIFAX 2450 only)

Note: OKIFAX 1050/2350 does not back up the message received in memory for the power failure.

32 Telephone handset — General telephone function is available while the (option) power is on.

34 Overheat protection — The heat of the fuser unit is controlled within predetermined temperature range by the thermistor. If the temperature of the heater exceeds this range, the LCD displays "PRINTER ALARM 4".

Furthermore, the built-in thermostat in the fuser unit prevents the fuser from being overheated even in the event of the failures in the above temperature control circuit.

35 PC interface applications (Option) (Applies to EIA class 1) — The following four modes are supported:
1) PC local printer mode
2) PC scanner mode
3) PC transmission mode
4) PC reception mode

36 Power supply unit and power consumption of the machine

Nominal input voltage	120 VAC	
Input voltage range	102 to 127 VAC	
Frequency range	50/60 Hz ± 2%	
Power consumption of the machine (Typical power)	FX-050	FX-175
1) Transmit	22 W	25 W
2) Receive (*)	183 W	227 W
3) Local copy(*)	208 W	330 W
4) Standby	9 W	12.1 W

* Chart: ITU-T No. 1 sample document

37 Ambient condition

1) Operating condition — See Figure 1.5.1

2) Storage condition — See Figure 1.5.1

38 Dimension (Main body) — 1) Width: Approx. 13" (330 mm)
2) Depth: Approx. 16.5" (420 mm)
3) Height: Approx. 9.25" (235 mm)

39 Weight — Approx. 26.66 lbs (13 kg)

	(Main body)	Excluding optional units, recording paper and packing materials.
40	Attachment (to the main body)	1) AC power cord x 1 2) Image Drum unit x 1 (Already installed) 3) Toner cartridge x 1 4) Telephone handset x 1 **(option)** 5) Curled cord and Telephone cord for (#4) x 1 **(option)** 6) Document stacker x 1 7) Telephone Line cord x 1 8) One touch sheet x 1 (Already installed) 9) User's guide x 1

Temperature and Humidity Conditions

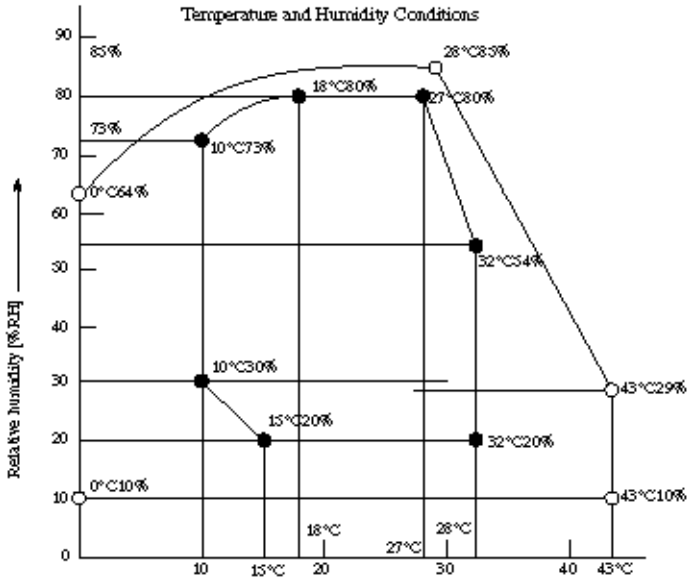

Figure 1.5.1 Ambient Condition

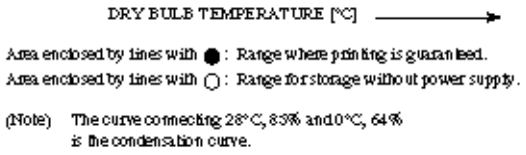

Copyright 1997, Okidata, Division of OKI America, Inc. All rights reserved. See the OKIDATA Business Partner Exchange (BPX) for any updates to this material. (http://bpx.okidata.com)

1.6 Reports and Lists

Table 1.6.1 (1/23) Reports and Lists Specifications
Table 1.6.1 shows Reports and Lists Specifications.

Note: **F +OT:** Press FUNCTION and One-touch key
FP: Function program setting
TF: Technical function setting

No.	Item	Specifications
1	Call-back message	The transmitter sends a call-back message to the receiver only when the receiver does not respond to voice request of the transmitter (Feeder Transmit only) **Note :** Sender Id plus Call Back Telephone Number must be programmed to enable this function. **Call-back Message Format: (Example)** (1) (2) (3) 05/19/95 09:24 OKI SKIBAURA → OKI HONJO NO.002 (4) PLEASE CALL BACK (5) OKI SKIBAURA (6) =103 5476 1234
2	Sender ID* Fax machines use this information to identify themselves during communications. In the United States and most other countries, programming this information into your fax machine is a legal requirement (for more information, refer to the "Federal Communications Commission Requirements for End Users" at the beginning of this manual.	(1) Date and time (2) Sender ID (3) CSI/Personal ID (4) Letters PLEASE CALL BACK (5) Sender ID (6) Senders call back telephone number The fax can transmit a programmed alphanumeric message, such as company's name, consisting of up to 32 characters. * (Outside only) **Sender ID Format: (Example)**

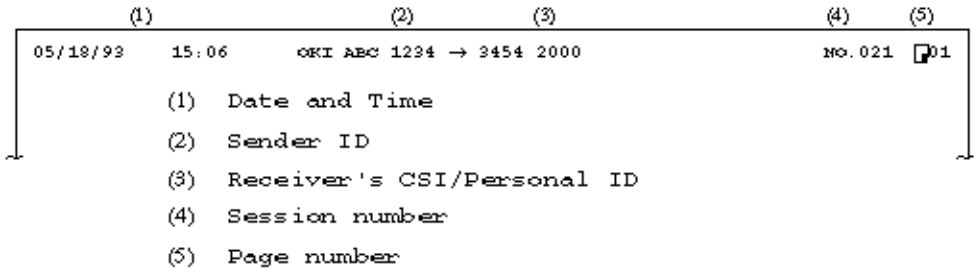

3 Transmitting subscriber identification (TSI printing

Received TSI can be printed at the top of the received page.

* TF + 10 (To enable or disable this function)
* TF + 09 Local date and time printing (OFF/ONCE/ALL pages)

TSI Printing and Local Date and Time Printing Format: (Example)

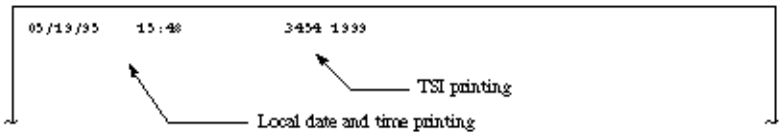

4 Cancel report (Power off report)

The fax can automatically print out a power-off report when the power off condition occurs.

Cancel Report Format: (Example)

POWER OFF REPORT

05/19/95 17:05
ID=OKI

PLEASE CONFIRM BY THIS REPORT

TOTAL TIME CALLING=20:05' CALLED=15:23'

DATE	TIME	S,R-TIME	DISTANT STATION ID	MODE	PAGES	RESULT	
05/17	10:00	00'20"	OKI FAX	CALLED	02	OK	0000
05/17	10:10	00'00"	0485-88-3385	CALLING	00	STOP	9080
05/17	10:15	00'20"	0495+22-5400	CALLED	01	OK	0000
05/17	10:30	00'00"	ODS TAKASAKI	CALLING	00	NO	90C1
05/17	12:05	01'20"	OKI FAX	BOX=01	03	OK	0000
05/17	13:00	00'20"	03-5476-4300	CALLING	01	OK	0000
05/17	15:40	03'25"	ODS TAKASAKI	CALLED	05	OK	0000
05/17	19:00	05'20"	OKI FAX	CALLED	08	OK	0000
05/18	09:03	00'20"	03-5476-4300	CALLED	01	OK	0000
05/18	10:00	00'00"	OKI FAX	CALLING	00	STOP	9080
05/18	10:10	02'00"	OKI SHIBAURA	CALLED	03	OK	0000
05/18	10:22	00'12"	0495-22-5400	CALLING	00	STOP	9080
05/18	10:50	00'20"	0495-22-5400	CALLED	03	OK	0000
05/18	12:05	00'20"	OKI FAX	CALLING	01	OK	0000
05/18	15:00	01'30"		B.C.		COMP	60A0
05/18	15:30	00'20"		CALLING	00	STOP	9080
05/18	17:05	05'20"		CALLING	02	OK	0000
05/18	19:04	00'20"	03-5476-4300	CALLIN	00	STOP	9080
05/19	09:00	01'11"		BOX=01	02	OK	0000
05/19	10:20	00'20"	03-45476-4300	CALLED	02	OK	0000
05/19	10:35	02'23"		CALLED	04	OK	0000
05/19	10:50	00'20"	ODS TAKASAKI	CALLED	01	OK	0000
05/19	11:03	00'00"	OKI FAX	CALLING	00	STOP	9080
05/19	13:00	00'24"	OKI FAX	CALLED	01	OK	0000
05/19	14:02	00'20"	0495-22-5400	CALLED	03	OK	0000
05/19	14:30	01'28"	OKI FAX	CALLED	03	OK	0000
05/19	14:45	00'21"		CALLED	01	OK	0000
05/19	15:11	00'50"	0495-22-5400	CALLED	02	OK	0000
05/19	16:00	00'50"	ODS TAKSAKI	CALLING	02	OK	0000
05/19	17:05	01'30"		B.C.		COMP	60A0

5 Activity report The fax can print out an activity report manually, or automatically when 30 communications are recorded.

* REPORT PRINTOUT+1(Manual printout)
* TF + 34 (Automatic printout, Default is OFF)

Message Confirmation Report Format: (Example)

(1) ACTIVITY REPORT

(2) 05/19/95 17:10
(3) ID=OKI

(4) TOTAL TIME CALLING=20:05' CALLED=15:23'

DATE (5)	TIME (6)	S,R-TIME (7)	DISTANT STATION ID (8)	MODE (9)	PAGES (10)	RESULT (11)	(12)
05/17	10:00	00'20"	OKI FAX	CALLED	02	OK	0000
05/17	10:10	00'00"	0485-88-3385	CALLING	00	STOP	9080
05/17	10:15	00'20"	0495+22-5400	CALLED	01	OK	0000
05/17	10:30	00'00"	CDS TAKASAKI	CALLING	00	NO	90C1
05/17	12:05	01'20"	OKI FAX	BOX=01	03	OK	0000
05/17	13:00	00'20"	03-5476-4300	CALLING	01	OK	0000
05/17	15:40	03'25"	CDS TAKASAKI	CALLED	05	OK	0000
05/17	19:00	05'20"	OKI FAX	CALLED	08	OK	0000
05/18	09:03	00'20"	03-5476-4300	CALLED	01	OK	0000
05/18	10:00	00'00"	OKI FAX	CALLING	00	STOP	9080
05/18	10:10	02'00"	OKI SHIBAURA	CALLED	03	OK	0000
05/18	10:22	00'12"	0495-22-5400	CALLING	00	STOP	9080
05/18	10:50	00'20"	0495-22-5400	CALLED	03	OK	0000
05/18	12:05	00'20"	OKI FAX	CALLING	01	OK	0000
05/18	15:00	01'30"		B.C.		COMP	60A0
05/18	15:30	00'20"		CALLING	00	STOP	9080
05/18	17:05	05'20"		CALLING	02	OK	0000
05/18	19:04	00'20"	03-5476-4300	CALLING	00	STOP	9080
05/19	09:00	01'11"		BOX=01	02	OK	0000
05/19	10:20	00'20"	03-45476-4300	CALLED	02	OK	0000
05/19	10:35	02'23"		CALLED	04	OK	0000
05/19	10:50	00'20"	CDS TAKASAKI	CALLED	01	OK	0000
05/19	11:03	00'00"	OKI FAX	CALLING	00	STOP	9080
05/19	13:00	00'24"	OKI FAX	CALLED	01	OK	0000
05/19	14:02	00'20"	0495-22-5400	CALLED	03	OK	0000
05/19	14:30	01'28"	OKI FAX	CALLED	03	OK	0000
05/19	14:45	00'21"		CALLED	01	OK	0000
05/19	15:11	00'50"	0495-22-5400	CALLED	02	OK	0000
05/19	16:00	00'50"	CDS TAKSAKI	CALLING	02	OK	0000
05/19	17:05	01'30"		B.C.		COMP	60A0

(1) Title of the report
(2) Date and time when the report was printed
(3) Sender ID
(4) Total TX and RX time
(5) Date of transmission or reception
(6) Time when the communication started
(7) Time span of the fax communication.
(8) Identification of the remote station
    Personal ID/Location ID/TSI/CSI/Dial number or space
(9) Communication mode:
    CALLING (Transmission)
    CALLED (Reception NG or MEMORY RX)
    B. C. (Broadcast)
    BOX=XX (Confidential reception)
(10) Number of transmitted pages or received pages

(11) Result code

OK (Note1)/NO/STOP (Note 2)/BUSY/PAPER (Out of recording paper)/S_JAM (Document jam)/R_JAM (Recording paper jam)/COVER/COMP (Completion of a broadcast)/PUNIT (Printer Alarm)/CANCL (Confidential reception T.O.)

Note 1 The following cases are included:

Unmatched handshaking to the received NSF.

Unmatched password to the received NSC in the polling transmission mode.

Note 2: The following cases are included:

The STOP key is pressed.

The memory cancellation operation removes the message from the active memory files.

(12) Service code

Copyright 1997, Okidata, Division of OKI America, Inc. All rights reserved. See the OKIDATA Business Partner Exchange (BPX) for any updates to this material. (http://bpx.okidata.com)

No.	Item	Specifications
6	Message confirmation report	The fax can print out a message confirmation report manually or automatically depending on user set-up. **Note** 1: When COPY key is pressed immediately after a single location transmission, this report can be printed (Manual printout) **Note 2:**A portion of the first page of the TX document will be printed just below the message confirmation when sending from memory.

Message Confirmation Report Format (1/2): (Example)

(1) MESSAGE CONFIRMATION

(2) 05/19/95 08:05
(3) ID=OKI

(4) DATE	(5) S.R-TIME	(6) DISTANT STATION ID	(7) MODE	(8) PAGES	(9) RESULT	(10)
05/19	00'20"	OKI FAX	CALLING	02	OK	0000

Message Confirmation Report Format (2/2): (Example)

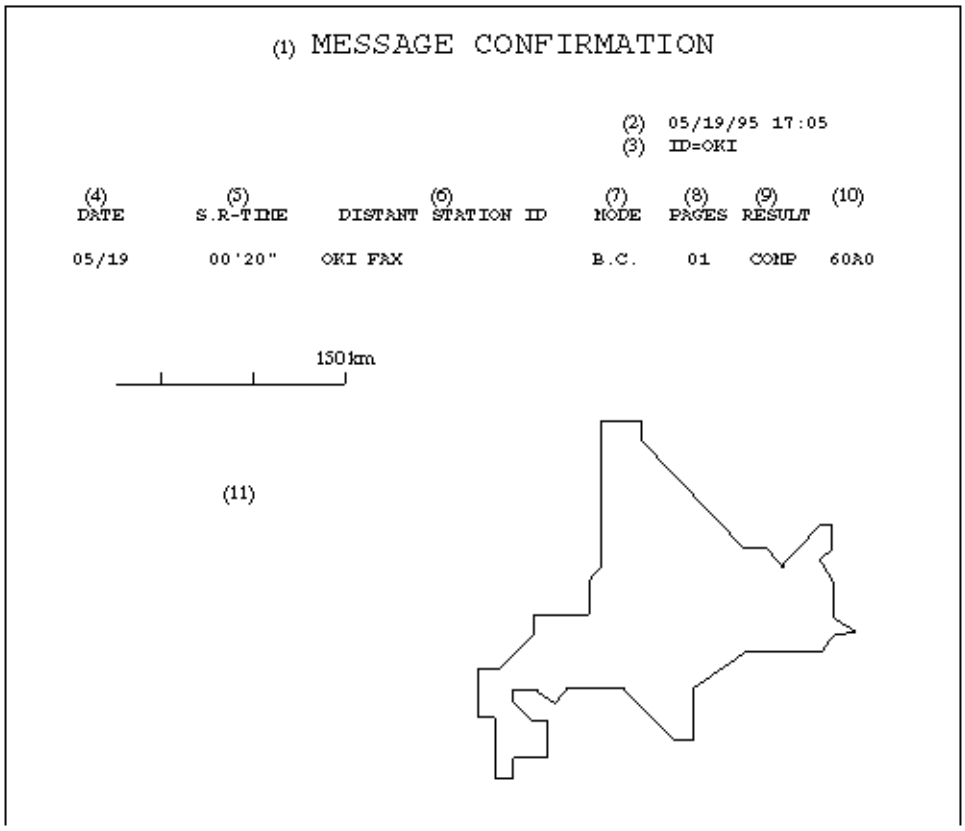

(1) Title of the report
(2) Date and time when the report was printed
(3) Sender ID
(4) Date of transmission or reception
(5) Length of time for which the fax was connected to the line
(6) Identification of the remote station
Personal ID/Location ID/TSI/CSI/Dial number
(7) Communication mode
Reference to ACTIVITY REPORT
(8) Number of transmitted pages or received pages
(9) Result of the communication
Reference to ACTIVITY REPORT
(10) Service code
(11) Portion of the first page transmitted

7 Broadcast entry report The fax can print out a broadcast entry report if specified during programming sequence of a broadcast.

Broadcast Entry Report Format: (Example)

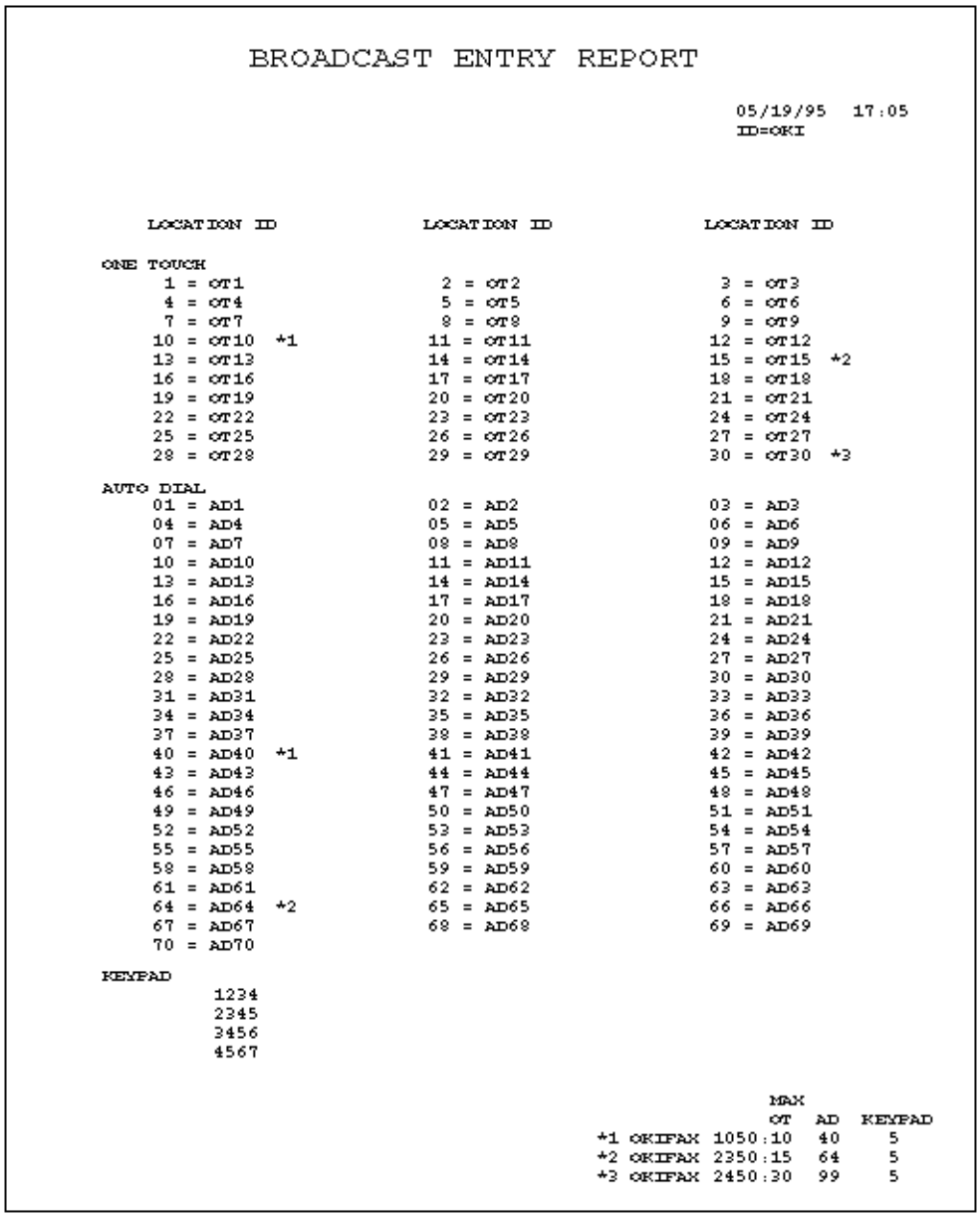

BROADCAST ENTRY REPORT

05/19/95 17:05
ID=OKI

LOCATION ID	LOCATION ID	LOCATION ID
ONE TOUCH		
1 = OT1	2 = OT2	3 = OT3
4 = OT4	5 = OT5	6 = OT6
7 = OT7	8 = OT8	9 = OT9
10 = OT10 *1	11 = OT11	12 = OT12
13 = OT13	14 = OT14	15 = OT15 *2
16 = OT16	17 = OT17	18 = OT18
19 = OT19	20 = OT20	21 = OT21
22 = OT22	23 = OT23	24 = OT24
25 = OT25	26 = OT26	27 = OT27
28 = OT28	29 = OT29	30 = OT30 *3
AUTO DIAL		
01 = AD1	02 = AD2	03 = AD3
04 = AD4	05 = AD5	06 = AD6
07 = AD7	08 = AD8	09 = AD9
10 = AD10	11 = AD11	12 = AD12
13 = AD13	14 = AD14	15 = AD15
16 = AD16	17 = AD17	18 = AD18
19 = AD19	20 = AD20	21 = AD21
22 = AD22	23 = AD23	24 = AD24
25 = AD25	26 = AD26	27 = AD27
28 = AD28	29 = AD29	30 = AD30
31 = AD31	32 = AD32	33 = AD33
34 = AD34	35 = AD35	36 = AD36
37 = AD37	38 = AD38	39 = AD39
40 = AD40 *1	41 = AD41	42 = AD42
43 = AD43	44 = AD44	45 = AD45
46 = AD46	47 = AD47	48 = AD48
49 = AD49	50 = AD50	51 = AD51
52 = AD52	53 = AD53	54 = AD54
55 = AD55	56 = AD56	57 = AD57
58 = AD58	59 = AD59	60 = AD60
61 = AD61	62 = AD62	63 = AD63
64 = AD64 *2	65 = AD65	66 = AD66
67 = AD67	68 = AD68	69 = AD69
70 = AD70		

KEYPAD

1234
2345
3456
4567

	MAX OT	AD	KEYPAD
*1 OKIFAX 1050	10	40	5
*2 OKIFAX 2350	15	64	5
*3 OKIFAX 2450	30	99	5

8 Broadcast confirmation report The fax can print out a broadcast confirmation report manually or automatically, depending on user set-up.

* COPY key (Manual printout): Pressed immediately after a broadcast, will enable the manual printing of a broadcast confirmation report.

+ REPORT PRINTOUT + 2 (Manual printout)
* FP +02 (To enable or disable automatic printing)

Broadcast Confirmation Report Format: (Example)

BROADCAST CONFIRMATION REPORT

05/19/95 17:05
ID=OKI

PAGES = 01
START TIME = 05/19 17:02
TOTAL TIME = 00:02'30"

LOCATION ID	PAGES	RESULT	LOCATION ID	PAGES	RESULT
ONE TOUCH					
1 = OT1	01	OK	2 = OT2	01	OK
3 = OT3	01	OK	4 = OT4	01	OK
5 = OT5	01	OK			
AUTO DIL					
01 = AD1	01	OK	02 = AD2	01	OK
03 = AD3	01	OK	04 = AD4	01	OK
05 = AD5	01	OK			
KEYPAD					
1234	01	OK			
3456	01	OK			
5678	01	OK			

9 Confidential reception report — The fax can print out this report automatically on completion of a confidential reception.

Confidential Reception Report Format: (Example)

CONFIDENTIAL RX REPORT

05/19/95 17:05
ID=OKI

DATA	S.R-TIME	DISTANT STATION	MODE	PAGES	RESULT	
05/17	00'20"	OKI DATA	BOX=01	02	OK	0000

10 Telephone directory — This directory is printed manually. (REPORT PRINTING +3)

See following sections for examples.

Copyright 1997, Okidata, Division of OKI America, Inc. All rights reserved. See the OKIDATA Business Partner Exchange (BPX) for any updates to this material. (http://bpx.okidata.com)

Telephone Directory for OKIFAX 1050 (1/2): (Example)

TELEPHONE DIRECTORY P1

04/13/95 19:19
ID=OKI DATA CORP.

	LOCATION ID		TEL NO.	PRI. ECHO
ONE TOUCH				
1	OKI SERVICE		123 123 123	
		OR	111 222 333	(OFF)
2	OKI OFFICE		456 456 456	
		OR	444 555 666	(OFF)
3	OOKI LABORATORY		789 789 789	
		OR	777 888 999	(OFF)
4	ODC TAKASAKI		000 111 222	
		OR	444 555 666	(OFF)
5	ODC QA/QC LAB.		1234 5678 90123	
		OR	123 123 123	(OFF)
6		OR		(OFF)
7		OR		(OFF)
8		OR		(OFF)
9		OR		(OFF)
10		OR		(OFF)
AUTO DIAL				
01				
02				
03				
04				
05				
06				
07	ODC TAKASAKI		0273 28 6357	
08				
09				
10				
11				
12				
13				
14				
15				
16				
17				
18				
19				
20				
21				
22				
23				
24				
25				
26				
27				
28				
29				
30				
31				
32				
33				
34				
35				
36				
37				
38				
39				
40				

Copyright 1997, Okidata, Division of OKI America, Inc. All rights reserved. See the OKIDATA Business Partner Exchange (BPX) for any updates to this material. (http://bpx.okidata.com)

Telephone Directory for OKIFAX 1050 (2/2): (Example)

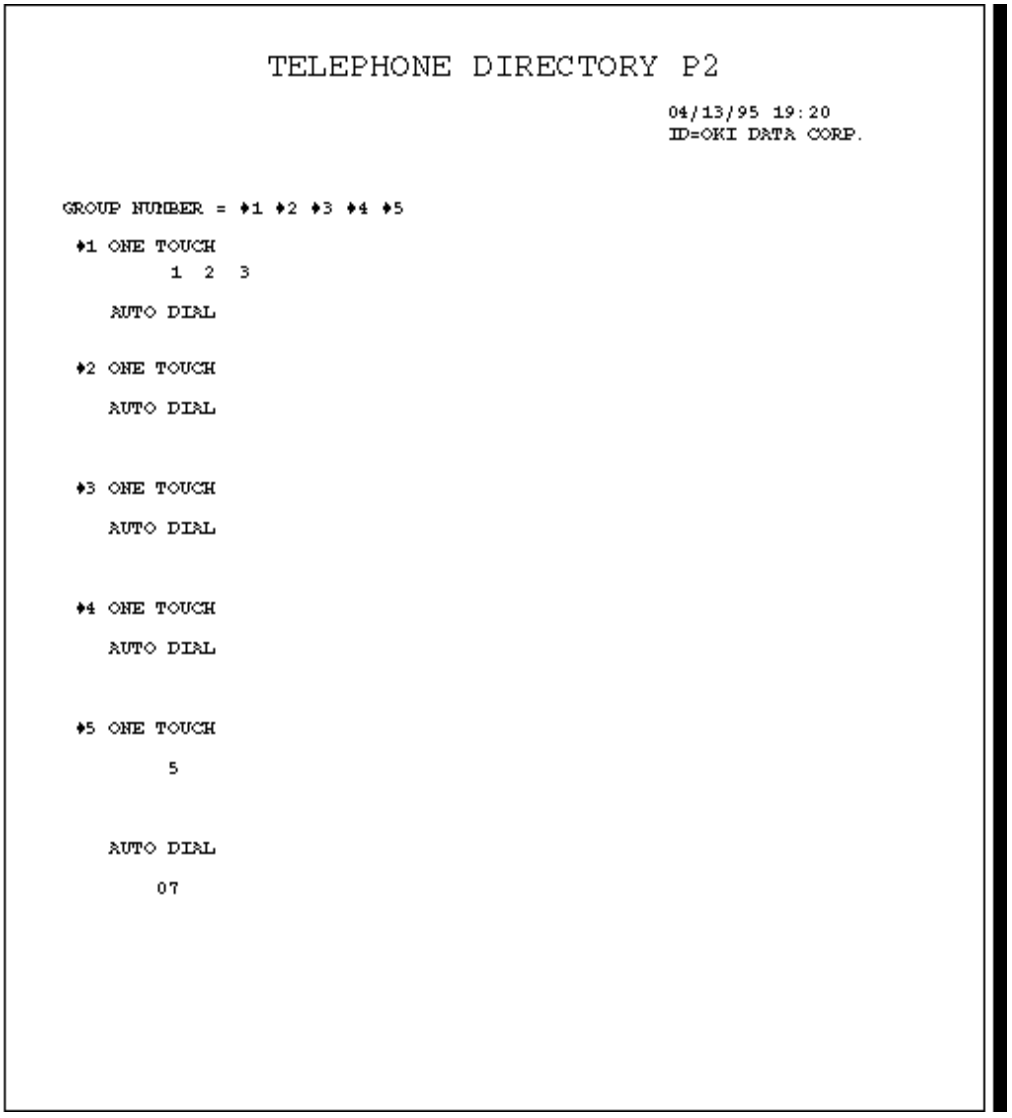

TELEPHONE DIRECTORY P2

04/13/95 19:20
ID=OKI DATA CORP.

GROUP NUMBER = ♦1 ♦2 ♦3 ♦4 ♦5

♦1 ONE TOUCH
1 2 3

AUTO DIAL

♦2 ONE TOUCH

AUTO DIAL

♦3 ONE TOUCH

AUTO DIAL

♦4 ONE TOUCH

AUTO DIAL

♦5 ONE TOUCH

5

AUTO DIAL

07

Copyright 1997, Okidata, Division of OKI America, Inc. All rights reserved. See the OKIDATA Business Partner Exchange (BPX) for any updates to this material. (http://bpx.okidata.com)

Telephone Directory for OKIFAX 2350 (1/4): (Example)

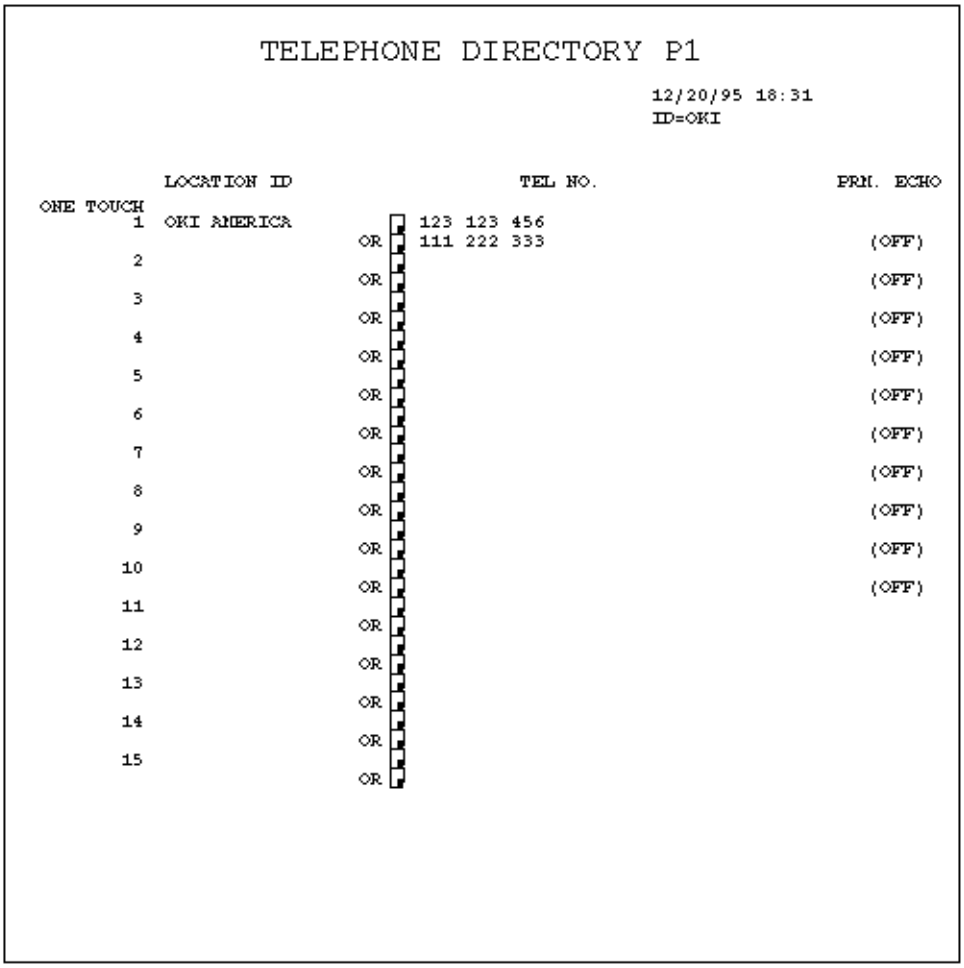

TELEPHONE DIRECTORY P1

12/20/95 18:31
ID=OKI

ONE TOUCH	LOCATION ID		TEL NO.	PRN. ECHO
1	OKI AMERICA		123 123 456	
		OR	111 222 333	(OFF)
2		OR		(OFF)
3		OR		(OFF)
4		OR		(OFF)
5		OR		(OFF)
6		OR		(OFF)
7		OR		(OFF)
8		OR		(OFF)
9		OR		(OFF)
10		OR		(OFF)
11		OR		
12		OR		
13		OR		
14		OR		
15		OR		

Copyright 1997, Okidata, Division of OKI America, Inc. All rights reserved. See the OKIDATA Business Partner Exchange (BPX) for any updates to this material. (http://bpx.okidata.com)

Telephone Directory for OKIFAX 2350 (2/4): (Example)

TELEPHONE DIRECTORY P2

12/20/95 18:31
ID=OKI

AUTO DIAL	LOCATION ID	TEL NO.
01	ODC TAKASAKI	1234 56 7890
02		1234 56 7780
03		
04		
05		
06		
07		
08		
09		
10		
11		
12		
13		
14		
15		
16		
17		
18		
19		
20		
21		
22		
23		
24		
25		
26		
27		
28		
29		
30		
31		
32		
34		
35		
36		
37		
38		
39		
40		
41		
42		
43		
44		
45		
46		
47		
48		
49		
50		
51		
52		
53		
54		
55		
56		
57		
58		
59		
60		
61		
62		
63		
64		

Copyright 1997, Okidata, Division of OKI America, Inc. All rights reserved. See the OKIDATA Business Partner Exchange (BPX) for any updates to this material. (http://bpx.okidata.com)

Telephone Directory for OKIFAX 2350 (3/4): (Example)

```
                    TELEPHONE DIRECTORY P3

                                          12/20/95 18:32
                                          ID=OKI


GROUP NUMBER = ♦1 ♦2 ♦3 ♦4 ♦5 ♦6 ♦7

  ♦1  ONE TOUCH
        1  2  3

      AUTO DIAL
        03 05

  ♦2  ONE TOUCH

      AUTO DIAL

  ♦3  ONE TOUCH

      AUTO DIAL

  ♦4  ONE TOUCH

      AUTO DIAL

  ♦5  ONE TOUCH

      AUTO DIAL

  ♦6  ONE TOUCH

      AUTO DIAL

  ♦7  ONE TOUCH

      AUTO DIAL
```

Copyright 1997, Okidata, Division of OKI America, Inc. All rights reserved. See the OKIDATA Business Partner Exchange (BPX) for any updates to this material. (http://bpx.okidata.com)

Telephone Directory for OKIFAX 2350 (4/4): (Example)

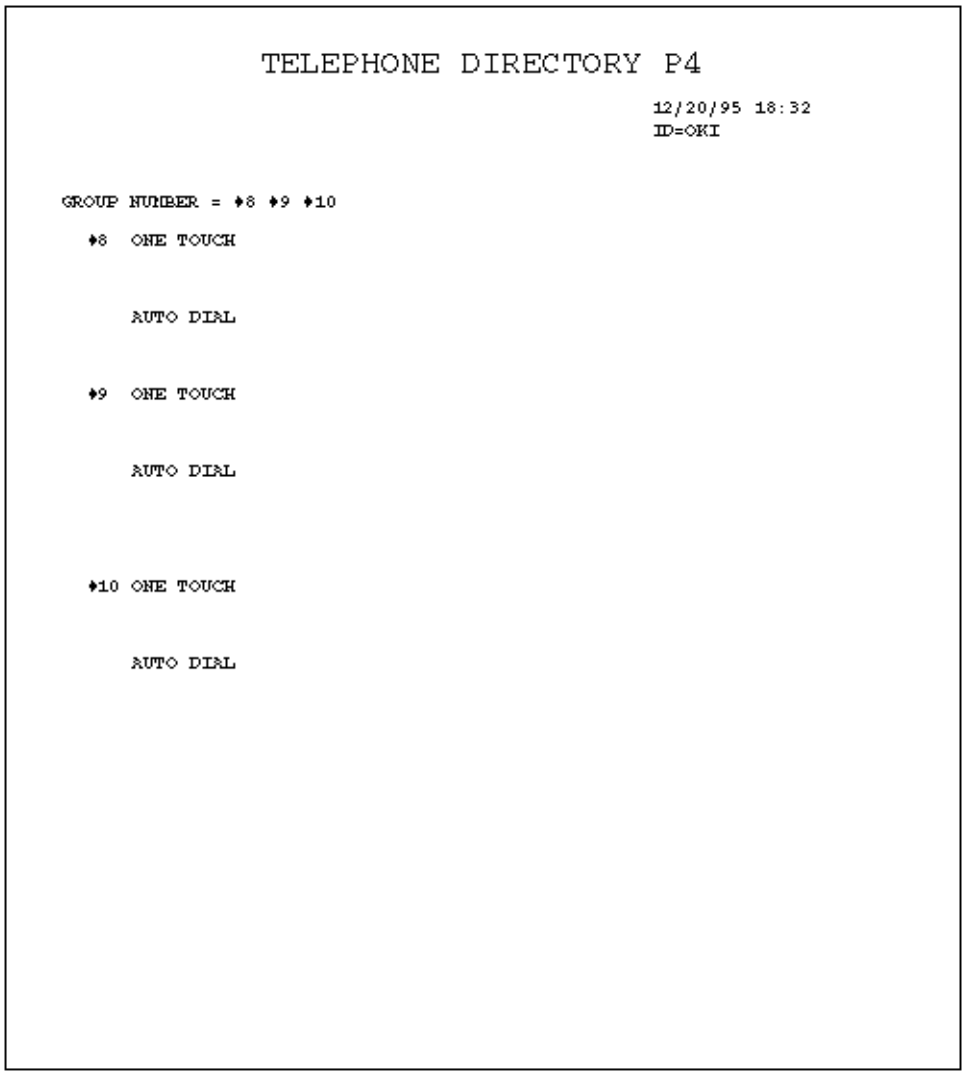

TELEPHONE DIRECTORY P4

12/20/95 18:32
ID=OKI

GROUP NUMBER = ♦8 ♦9 ♦10

♦8 ONE TOUCH

AUTO DIAL

♦9 ONE TOUCH

AUTO DIAL

♦10 ONE TOUCH

AUTO DIAL

Copyright 1997, Okidata, Division of OKI America, Inc. All rights reserved. See the OKIDATA Business Partner Exchange (BPX) for any updates to this material. (http://bpx.okidata.com)

Telephone Directory for OKIFAX 2450 (1/6): (Example)

TELEPHONE DIRECTORY P1

05/19/95 17:05
ID=OKI

ONE TOUCH	LOCATION ID		TEL NO.	PRI. ECHO
1	OKI SERVICE		0001	
		OR	0101	(ON)
2	ODC		0002	
		OR	0102	(OFF)
3	NEW YORK		0003	
		OR	0103	(OFF)
4	OT4		0004	
		OR	0104	(OFF)
5	OT5		0005	
		OR	0105	(OFF)
6	OT6		0006	
		OR	0106	(OFF)
7	OT7		0007	
		OR	0107	(OFF)
8	OT8		0008	
		OR	0108	(OFF)
9	OT9		0009	
		OR	0109	(OFF)
10	OT10		0010	
		OR	0110	(OFF)
11	OT1		0011	
		OR	0111	(OFF)
12	OT2		0012	
		OR	0112	(OFF)
13	OT3		0013	
		OR	0113	(OFF)
14	OT4		0014	
		OR	0114	(OFF)
15	OT5		0015	
		OR	0115	(OFF)
16	OT6		0016	
		OR	0116	(OFF)
17	OT7		0017	
		OR	0117	(OFF)
18	OT8		0018	
		OR	0118	(OFF)
19	OT9		0019	
		OR	0119	(OFF)
20	OT10		0020	
		OR	0120	(OFF)
21	OT1		0021	
		OR	0121	(OFF)
22	OT2		0022	
		OR	0122	(OFF)
23	OT3		0023	
		OR	0123	(OFF)
24	OT4		0024	
		OR	0124	(OFF)
25	OT5		0025	
		OR	0125	(OFF)
26	OT6		0026	
		OR	0126	(OFF)
27	OT7		0027	
		OR	0127	(OFF)
28	OT8		0028	
		OR	0128	(OFF)
29	OT9		0029	
		OR	0129	(OFF)
30	OT10		0030	
		OR	0130	(OFF)

Copyright 1997, Okidata, Division of OKI America, Inc. All rights reserved. See the OKIDATA Business

Partner Exchange (BPX) for any updates to this material. (http://bpx.okidata.com)

Telephone Directory for OKIFAX 2450 (2/6): (Example)

TELEPHONE DIRECTORY P2

05/19/95 17:05
ID=OKI

AUTO DIAL	LOCATION ID	TEL NO.
01	TOKYO OFFCI	0001
02	PARIS	1002
03	NEW YORK	1003
04	AD04	1004
05	AD05	1005
06	AD06	1006
07	AD07	1007
08	AD08	1008
09	AD09	1009
10	AD10	1010
11	AD11	1011
12	AD12	1012
13	AD13	1013
14	AD14	1014
15	AD15	1015
16	AD16	1016
17	AD17	1017
18	AD18	1018
19	AD19	1019
20	AD20	1020
21	AD21	1021
22	AD22	1022
23	AD23	1023
24	AD24	1024
25	AD25	1025
26	AD26	1026
27	AD27	1027
28	AD28	1028
29	AD29	1029
30	AD30	1030
31	AD31	1031
32	AD32	1032
33	AD33	1033
34	AD34	1034
35	AD35	1035
36	AD36	1036
37	AD37	1037
38	AD38	1038
39	AD39	1039
40	AD40	1040
41	AD41	1041
42	AD42	1042
43	AD43	1043
44	AD44	1044
45	AD45	1045
46	AD46	1046
47	AD47	1047
48	AD48	1048
49	AD49	1049
50	AD50	1050
51	AD51	1051
52	AD52	1052
53	AD53	1053
54	AD54	1054
55	AD55	1055
56	AD56	1056
57	AD57	1057
58	AD58	1058
59	AD59	1059
60	AD60	1060
61	AD61	1061
62	AD62	1062
63	AD63	1063
64	AD64	1064

Copyright 1997, Okidata, Division of OKI America, Inc. All rights reserved. See the OKIDATA Business Partner Exchange (BPX) for any updates to this material. (http://bpx.okidata.com)

Telephone Directory for OKIFAX 2450 (3/6): (Example)

TELEPHONE DIRECTORY P3

05/19/95 17:05
ID=OKI

AUTO DIAL	LOCATION ID	TEL NO.
65	AD65	1065
66	AD66	1066
67	AD67	1067
68	AD68	1068
69	AD69	1069
70	AD60	1070
71	AD71	1071
72	AD72	1072
73	AD73	1073
74	AD74	1074
75	AD75	1075
76	AD76	1076
77	AD77	1077
78	AD78	1078
79	AD79	1079
80	AD80	1080
81	AD81	1081
82	AD82	1082
83	AD83	1083
84	AD84	1084
85	AD85	1085
86	AD86	1086
87	AD87	1087
88	AD88	1088
89	AD89	1089
90	AD90	1090
91	AD91	1091
92	AD92	1092
93	AD93	1093
94	AD94	1094
95	AD95	1095
96	AD96	1096
97	AD97	1097
98	AD98	1098
99	AD99	1099

Copyright 1997, Okidata, Division of OKI America, Inc. All rights reserved. See the OKIDATA Business Partner Exchange (BPX) for any updates to this material. (http://bpx.okidata.com)

Telephone Directory for OKIFAX 2450 (4/6): (Example)

```
                    TELEPHONE DIRECTORY P4

                                                  05/19/95 17:05
                                                  ID=OKI


GROUP NUMBER = ♦1 ♦2 ♦3 ♦4 ♦5 ♦6 ♦7

   ♦1 ONE TOUCH
          01 02 03 04 05 06 07 08 09 10 11 12 13 14 15 16 17 18 19 20 21 22 23 24 25
          26 27 28 29 30

     AUTO DIAL
          01 02 03 04 05 06 07 08 09 10 11 12 13 14 15 16 17 18 19 20 21 22 23 24 25
          26 27 28 29 30 31 32 33 34 35 36 37 38 39 40 41 42 43 44 45 46 47 48 49 50
          51 52 53 54 55 56 57 58 59 60 61 62 63 64 65 66 67 68 69 70 71 72 73 74 75
          76 77 78 79 80 81 82 83 84 85 86 87 88 89 90 91 92 93 94 95 96 97 98 99


   ♦2 ONE TOUCH

      AUTO DIAL


   ♦3 ONE TOUCH

      AUTO DIAL


   ♦4 ONE TOUCH

      AUTO DIAL


   ♦5 ONE TOUCH

      AUTO DIAL


   ♦6 ONE TOUCH

      AUTO DIAL
```

Copyright 1997, Okidata, Division of OKI America, Inc. All rights reserved. See the OKIDATA Business Partner Exchange (BPX) for any updates to this material. (http://bpx.okidata.com)

Telephone Directory for OKIFAX 2450 (5/6): (Example)

```
                    TELEPHONE DIRECTORY P5

                                          05/19/95 17:05
                                          ID=OKI

GROUP NUMBER = ♦8 ♦9 ♦10 ♦11 ♦12 ♦13 ♦14

   ♦8  ONE TOUCH
       AUTO DIAL

   ♦9  ONE TOUCH
       AUTO DIAL

   ♦10 ONE TOUCH
       AUTO DIAL

   ♦11 ONE TOUCH
       AUTO DIAL

   ♦12 ONE TOUCH
       AUTO DIAL

   ♦13 ONE TOUCH
       AUTO DIAL

   ♦14 ONE TOUCH
       AUTO DIAL
```

Copyright 1997, Okidata, Division of OKI America, Inc. All rights reserved. See the OKIDATA Business Partner Exchange (BPX) for any updates to this material. (http://bpx.okidata.com)

Telephone Directory for OKIFAX 2450 (6/6): (Example)

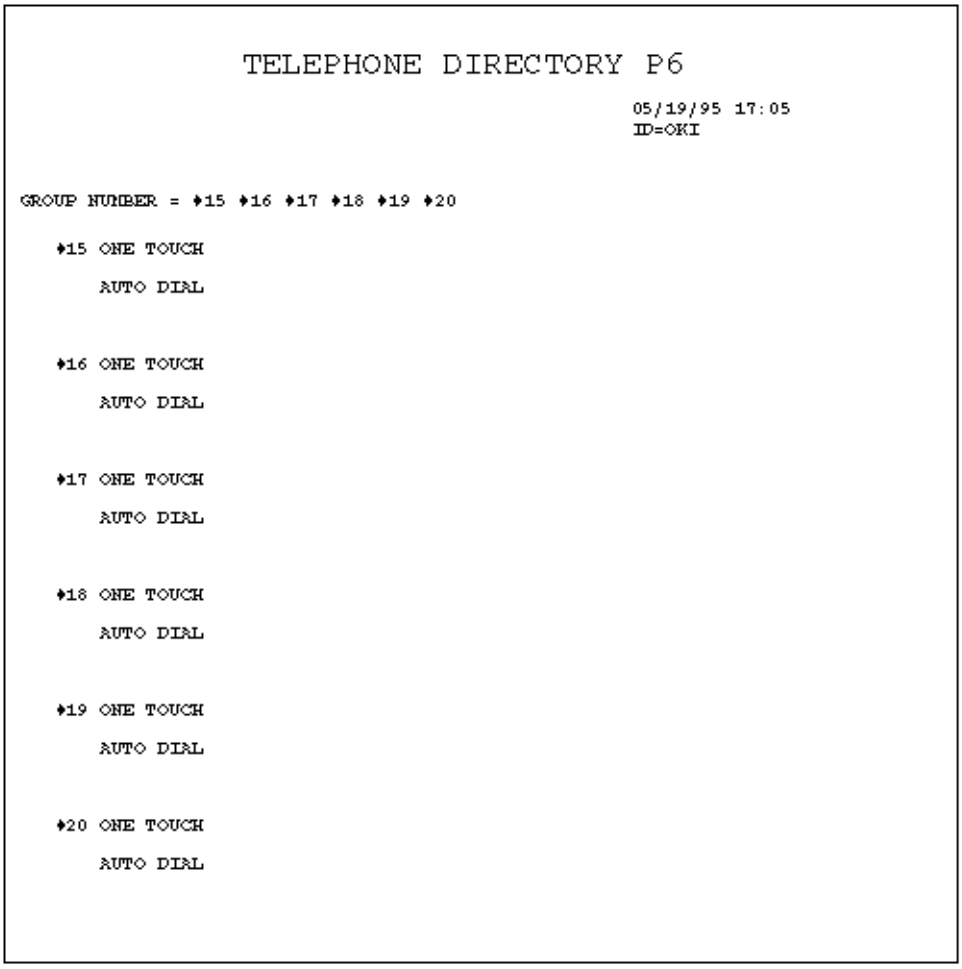

TELEPHONE DIRECTORY P6

05/19/95 17:05
ID=OKI

GROUP NUMBER = ♦15 ♦16 ♦17 ♦18 ♦19 ♦20

♦15 ONE TOUCH
AUTO DIAL

♦16 ONE TOUCH
AUTO DIAL

♦17 ONE TOUCH
AUTO DIAL

♦18 ONE TOUCH
AUTO DIAL

♦19 ONE TOUCH
AUTO DIAL

♦20 ONE TOUCH
AUTO DIAL

Copyright 1997, Okidata, Division of OKI America, Inc. All rights reserved. See the OKIDATA Business Partner Exchange (BPX) for any updates to this material. (http://bpx.okidata.com)

No.	Item	Specifications
11	Configuration report	This report is printed manually. (REPORT PRINTING +4)

Configuration Report Format:

Configuration Report: Service bit=OFF

```
                        CONFIGURATION

                                                    05/19/95 17:05
                                                    ID=OKI
FUNCTION LIST

      01:MCF (SINGLE-LOC.)     02:MCF (MULTI-LOC.)      03:SENDER ID
         ON                       OFF                      ON

      04:MONITOR VOLUME        05:REMOTE DIAG.          06:CLOSED NETWORK
         LOW                      OFF                      OFF

      07:TX MODE DEFAULT       08:ECM/TIMER PRG.        09:BUZZER VOLUME
         FINE/NORMAL              35SEC                    MIDDLE

      10:1'ST PAPER SIZE       11:2'ND PAPER SIZE *1    12:SELECT LANGUAGE
         A4                       A4                       ENGLISH

      13:RINGER                14:REMOTE RECEIVE *2     15:RING RESPONSE
         ON                       OFF                      1RING

      16:MEM./FEEDER SWITCH
         MEMORY


      TEL NO.          = 0123
      CALL BACK NO.    = 1234

      REDIAL TRIES      3TRY          REDIAL INTERVAL   3MIN
      DIAL TONE         OFF           BUSY TONE         ON
      MF(TONE)/DP(PULSE)MF

                                      PBX LINE          OFF
                                      ACCESS DIGIT      OFF


      AUTO START        ON
```

*1: When second paper cassette (is installed and paper size is programmed, 2'nd paper size will appear in No. 11.

*2: OKIFAX 1050/2350 only.

Service Default Report (Configuration Report: Service bit=ON)

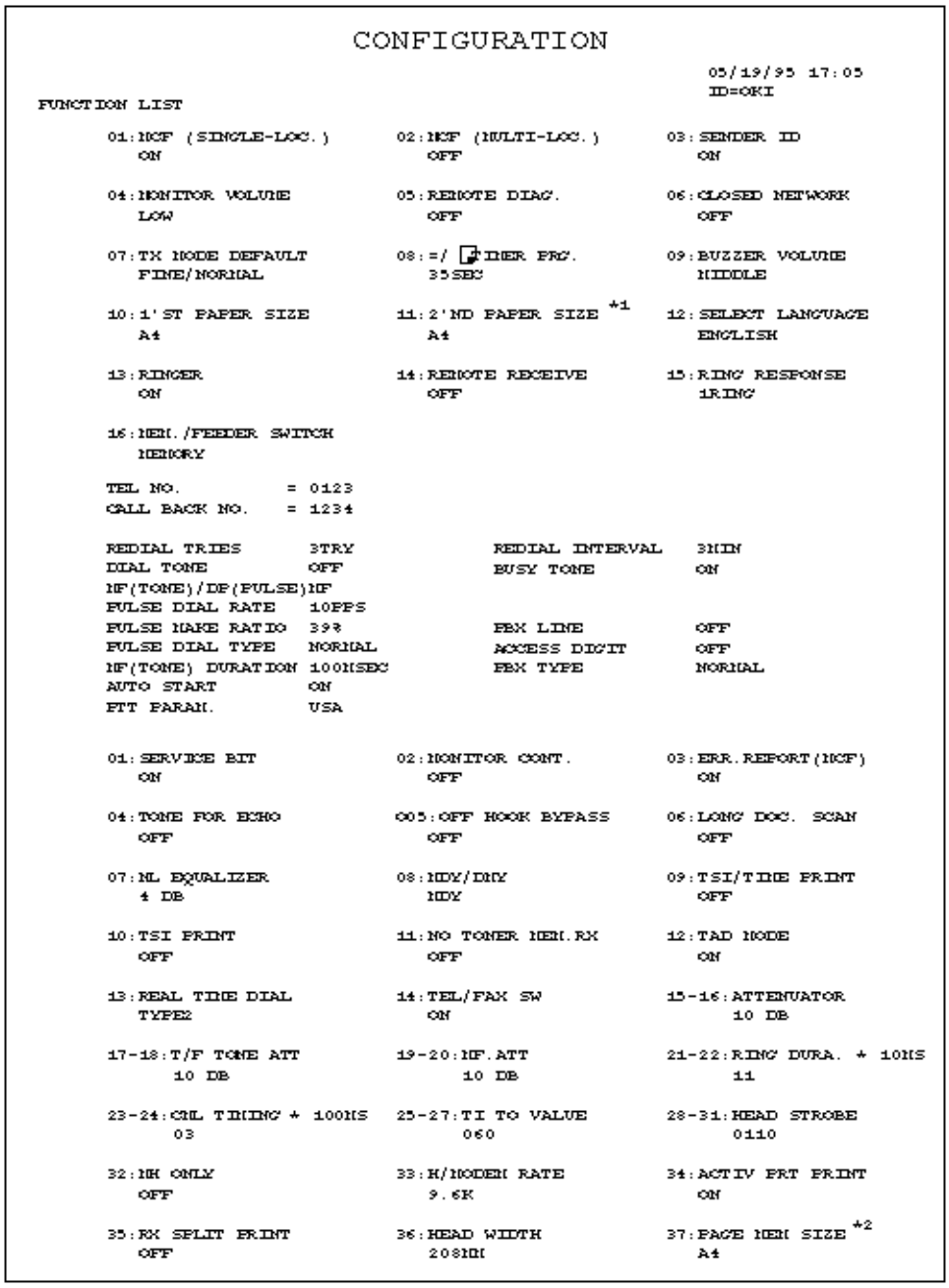

CONFIGURATION

05/19/95 17:05
ID=OKI

FUNCTION LIST

01:NCF (SINGLE-LOC.) ON	02:NCF (MULTI-LOC.) OFF	03:SENDER ID ON
04:MONITOR VOLUME LOW	05:REMOTE DIAG. OFF	06:CLOSED NETWORK OFF
07:TX MODE DEFAULT FINE/NORMAL	08:=/ TIMER PRG. 35SEC	09:BUZZER VOLUME MIDDLE
10:1'ST PAPER SIZE A4	11:2'ND PAPER SIZE *1 A4	12:SELECT LANGUAGE ENGLISH
13:RINGER ON	14:REMOTE RECEIVE OFF	15:RING RESPONSE 1RING
16:MEM./FEEDER SWITCH MEMORY		

TEL NO. = 0123			
CALL BACK NO. = 1234			
REDIAL TRIES	3TRY	REDIAL INTERVAL	3MIN
DIAL TONE	OFF	BUSY TONE	ON
MF(TONE)/DP(PULSE)	MF		
PULSE DIAL RATE	10PPS		
PULSE MAKE RATIO	39%	PBX LINE	OFF
PULSE DIAL TYPE	NORMAL	ACCESS DIGIT	OFF
MF(TONE) DURATION	100MSEC	PBX TYPE	NORMAL
AUTO START	ON		
PTT PARAM.	USA		

01:SERVICE BIT ON	02:MONITOR CONT. OFF	03:ERR.REPORT(NCF) ON
04:TONE FOR ECHO OFF	005:OFF HOOK BYPASS OFF	06:LONG DOC. SCAN OFF
07:NL EQUALIZER 4 DB	08:MDY/DMY MDY	09:TSI/TIME PRINT OFF
10:TSI PRINT OFF	11:NO TONER MEM.RX OFF	12:TAD MODE ON
13:REAL TIME DIAL TYPE2	14:TEL/FAX SW ON	15-16:ATTENUATOR 10 DB
17-18:T/F TONE ATT 10 DB	19-20:MF.ATT 10 DB	21-22:RING DURA. * 10MS 11
23-24:CNL TIMING * 100MS 03	25-27:TI TO VALUE 060	28-31:HEAD STROBE 0110
32:MH ONLY OFF	33:H/MODEM RATE 9.6K	34:ACTIV PRT PRINT ON
35:RX SPLIT PRINT OFF	36:HEAD WIDTH 208MM	37:PAGE MEM SIZE *2 A4

*1: When second paper cassette is installed and paper size is programmed, 2nd paper size will appear in No.11.

*2: For OKIFAX 2450

Copyright 1997, Okidata, Division of OKI America, Inc. All rights reserved. See the OKIDATA Business Partner Exchange (BPX) for any updates to this material. (http://bpx.okidata.com)

A. Setup Information

2.1 General

The following flowchart outlines the installation procedure.

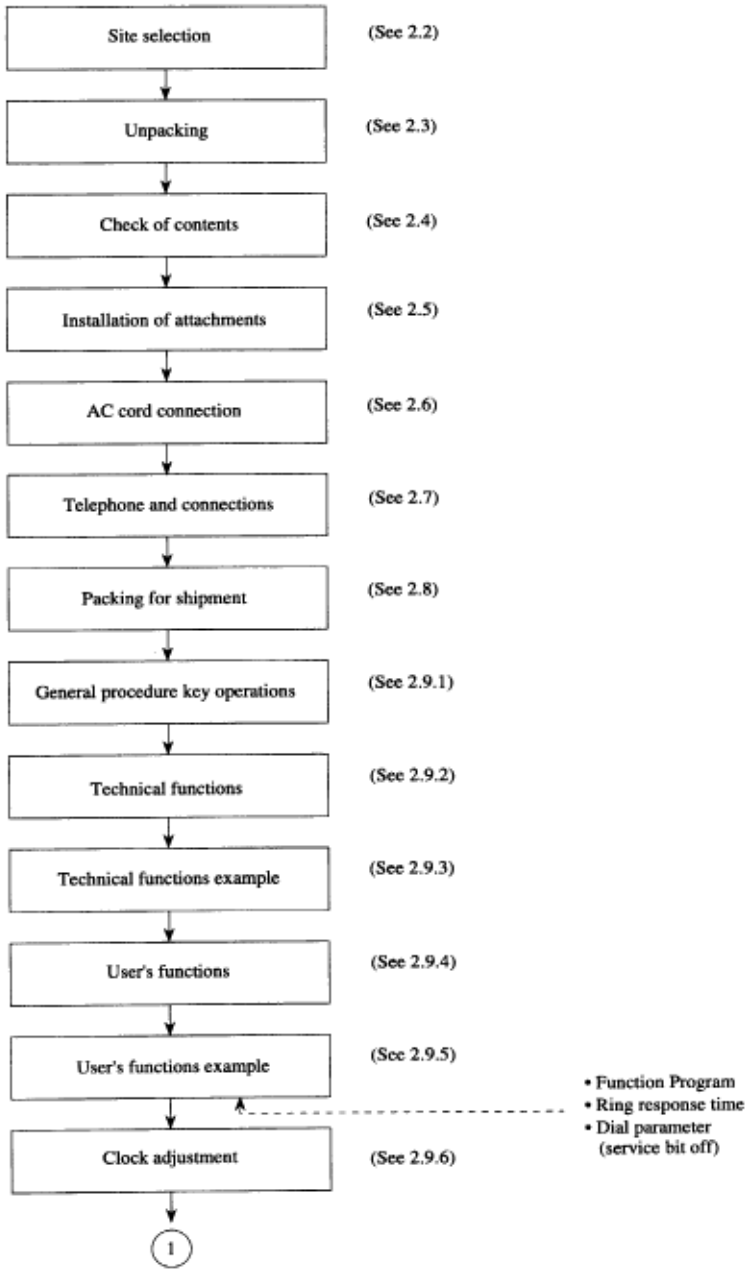

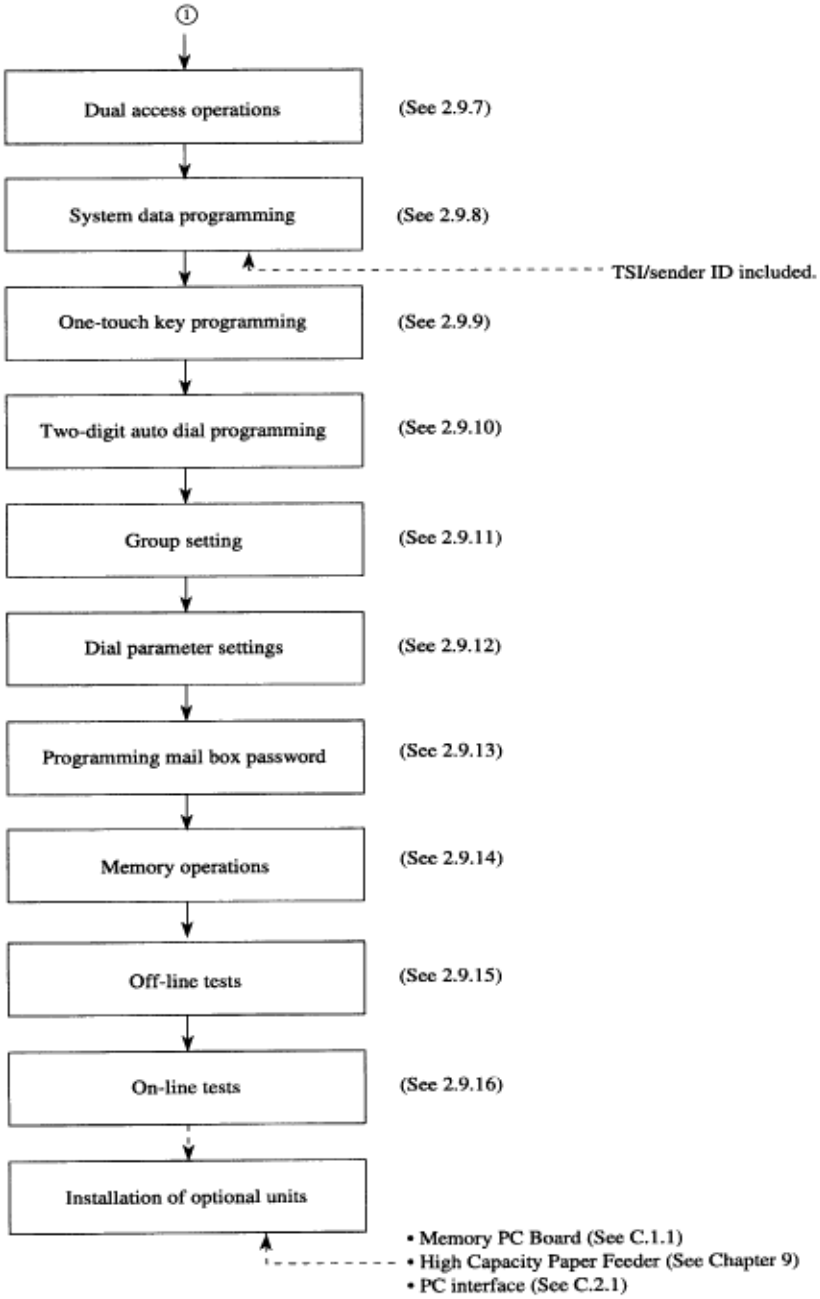

Copyright 1997, Okidata, Division of OKI America, Inc. All rights reserved. See the OKIDATA Business Partner Exchange (BPX) for any updates to this material. (http://bpx.okidata.com)

2.2 Site Selection

INSTALLATION

Precautions for Installation

2.2.01 Fluctuation in line voltage
120VAC (102V to 127V)

2.2.02 Room temperature
50 to 90°F (10 to 32°C)

2.2.03 Humidity
20 to 80% RH

2.2.04 Operating environment
Pressure: Equivalent of altitude of 8200 feet (2500 m) and below.

2.2.05 Exposure
Within five minutes at luminous intensity 2,000 lux (with the stacker cover opened).

2.2.06 Required space for installation
The facsimile requires the space as shown below for safety and good operability.

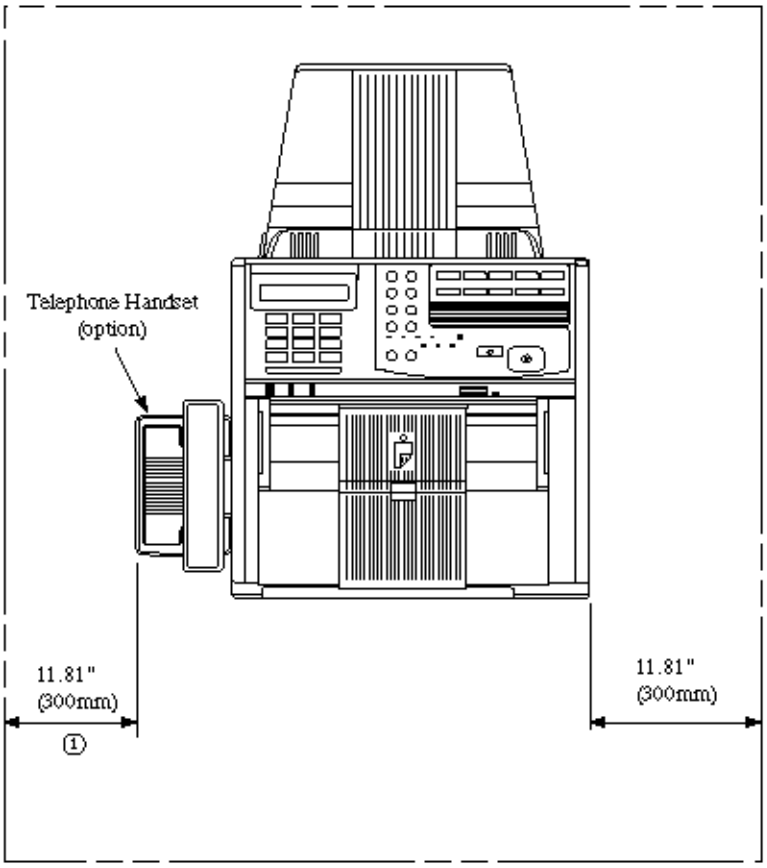

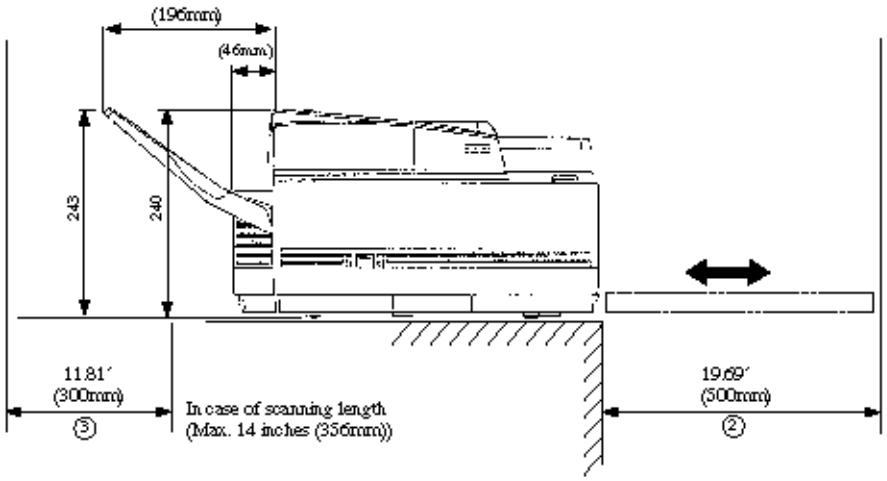

Note:
1 This space is necessary for handling the handset. (option) (page 2-3)
2 This space is necessary for removing the recording paper cassette.
3 This space is necessary for installing the document stacker and to allow space for the fan exhaust.

2.2.07 Levelness of installation surface

1 degree max.

2.2.08 Other requirements

Avoid installing in any of the following places:

- A location exposed to direct sunlight
- A location near a heat source or exposed to vibration
- A dusty location
- A location with an atmosphere of acid gas, or steam etc.,
- A location exposed to quick temperature changes

Copyright 1997, Okidata, Division of OKI America, Inc. All rights reserved. See the OKIDATA Business Partner Exchange (BPX) for any updates to this material. (http://bpx.okidata.com)

2.3 Unpacking

Procedure

2.3.01 Remove tape on the top of the carton box and open its cover.

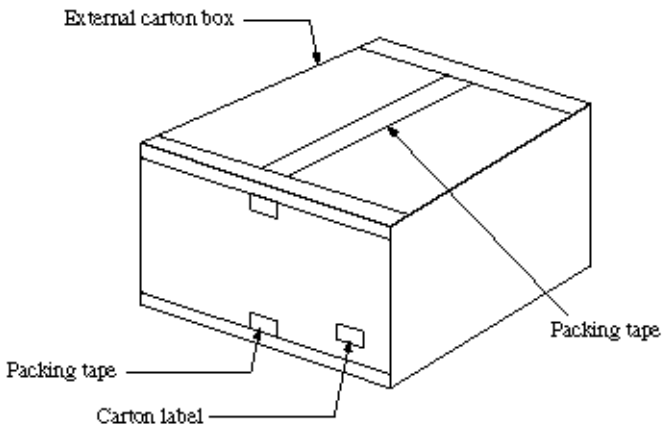

.**Figure 2.3.1 Unpacking Procedure (1)**

2.3.02 Take out the accessory box from the carton box. (See Figure 2.3.1 below)

2.3.03 Take out the machine with plastic wrapper from the box

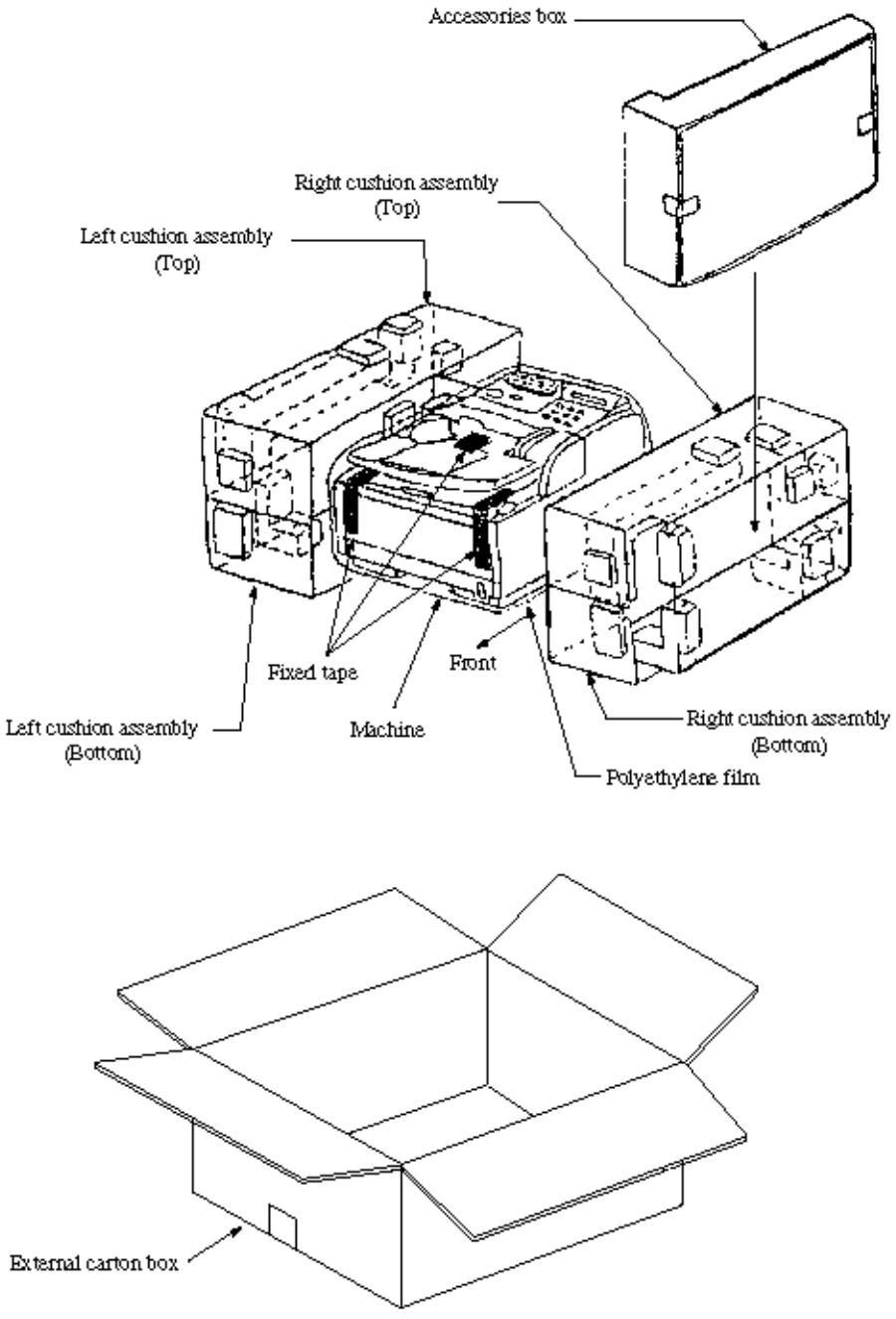

Figure 2.3.1 Unpacking Procedure (2)

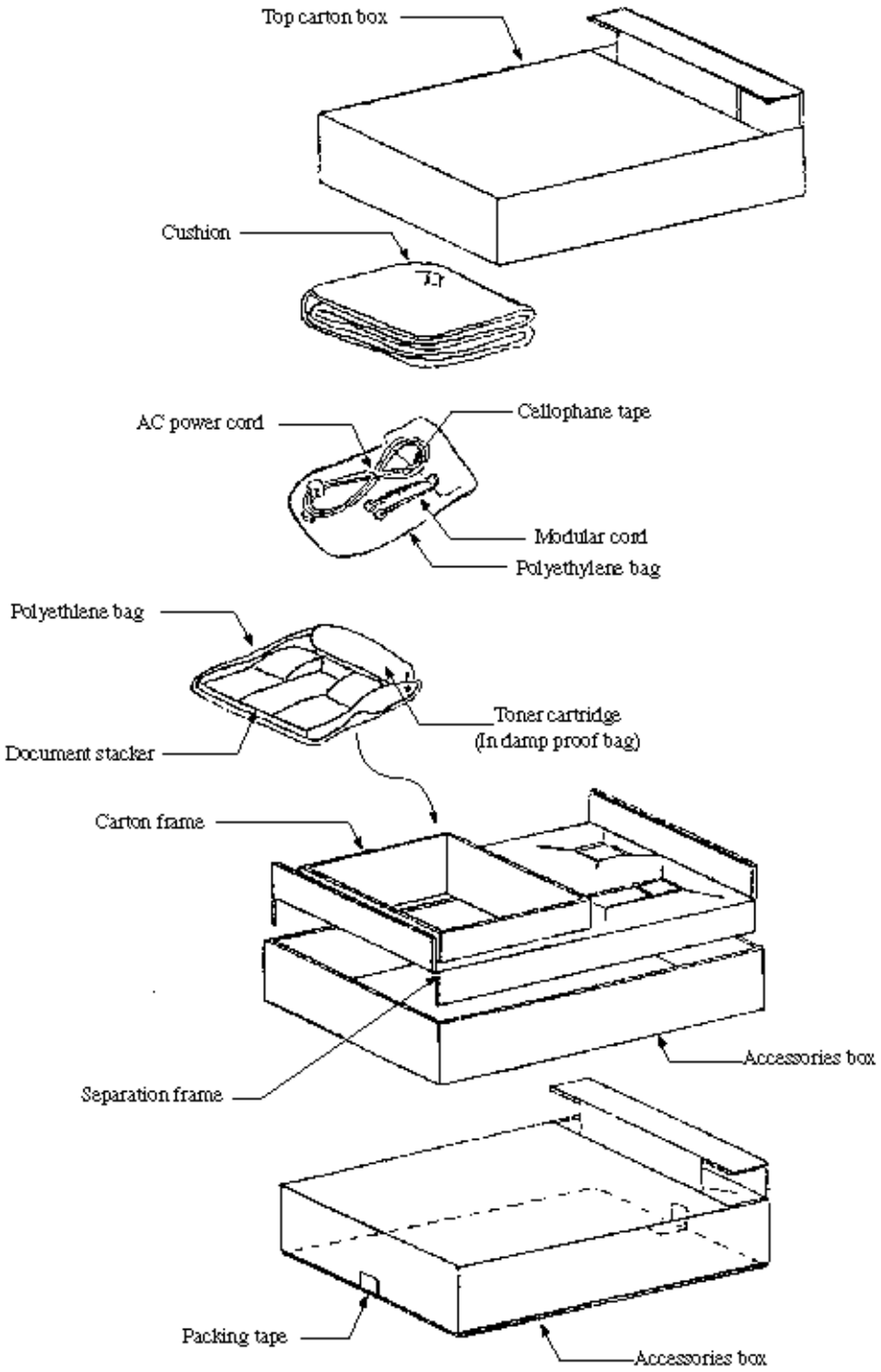

Figure 2.3.2 Unpacking Procedure (3)

Copyright 1997, Okidata, Division of OKI America, Inc. All rights reserved. See the OKIDATA Business Partner Exchange (BPX) for any updates to this material. (http://bpx.okidata.com)

2.4 Check of Contents

After removing the machine and accompanying accessories from the carton box, check the contents according to the following list:

Table 2.4.1 Contents List

Item No.	Name	Qty	Remarks
1	OKIFAX 1050/2350/2450 facsimile	1	
2	AC power cord	1	
3	I/D unit	1	Already installed.
4	Toner cartridge	1	
5	Document stacker	1	
6	Line cord	1	
7	7 User's guide	1 vol.	ODA

Copyright 1997, Okidata, Division of OKI America, Inc. All rights reserved. See the OKIDATA Business Partner Exchange (BPX) for any updates to this material. (http://bpx.okidata.com)

2.5 Installation of Attachments

2.5.01 Items

Image Drum (ID) Unit (already installed)
Toner cartridge
Recording paper
Document stacker

Copyright 1997, Okidata, Division of OKI America, Inc. All rights reserved. See the OKIDATA Business Partner Exchange (BPX) for any updates to this material. (http://bpx.okidata.com)

2.5.02 Procedure

Toner cartridge

- Peel off the fixed tape attached on the copy stacker.
- Open the document table and copy stacker.

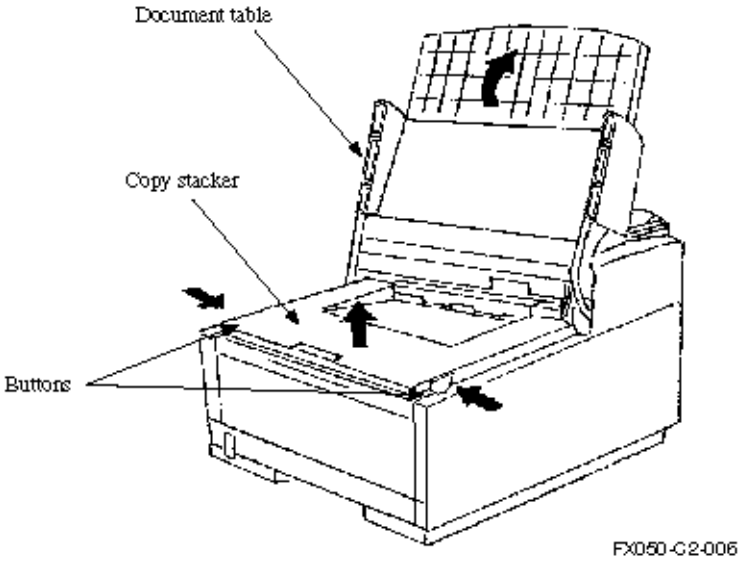

.**Figure 2.5.1 Toner Cartridge Installation (1)**

- Take the cushion out of the ID unit

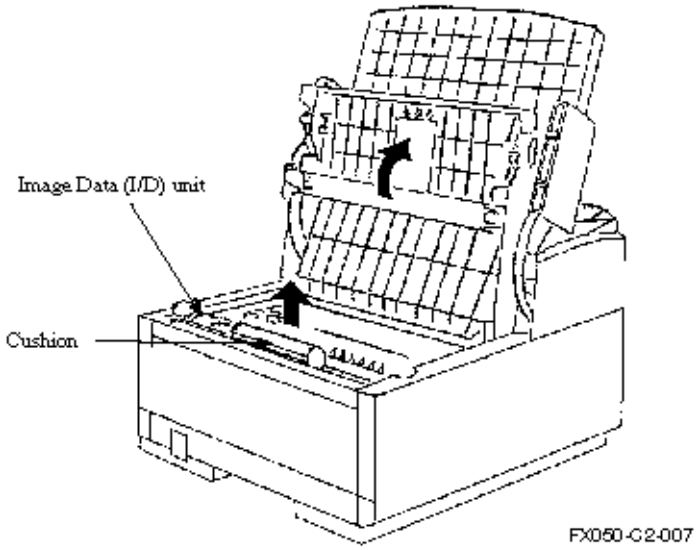

Figure 2.5.2 Toner Cartridge Installation (2)

Installation of Attachments - Continued

- Take out the toner cartridge from the damp proof bag, shake it five or six times as shown in the illustration to eliminate the toner deflection, and peel off the seal gently.

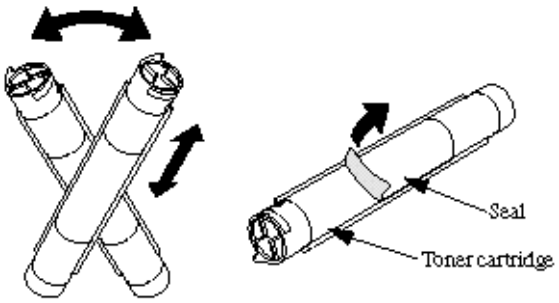

Figure 2.5.3 Toner Cartridge Installation (3)

- Ensure that the plastic tab on the right-hand side of the toner cartridge recess lines up with the groove on the toner cartridge.
- Press down on both ends to make sure the cartridge is fully seated.

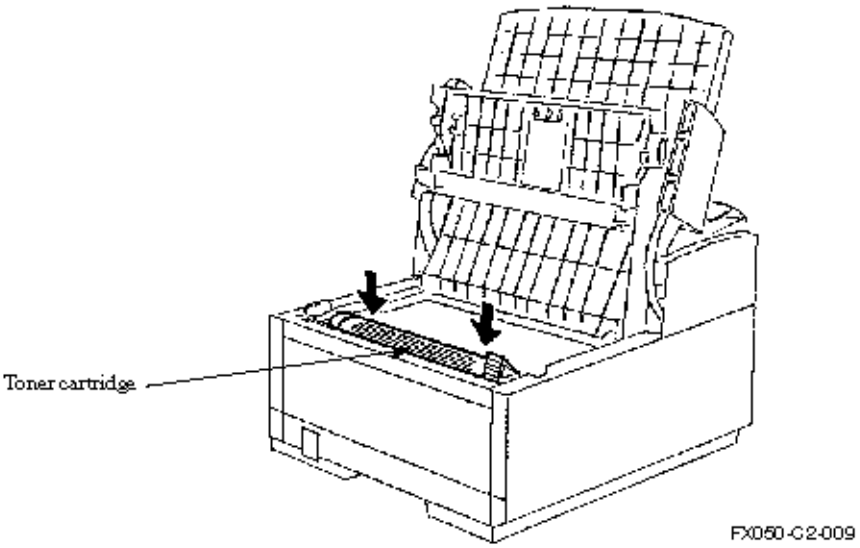

Figure 2.5.4 Toner Cartridge Installation (4)

- Push the blue tab forward until it stops.

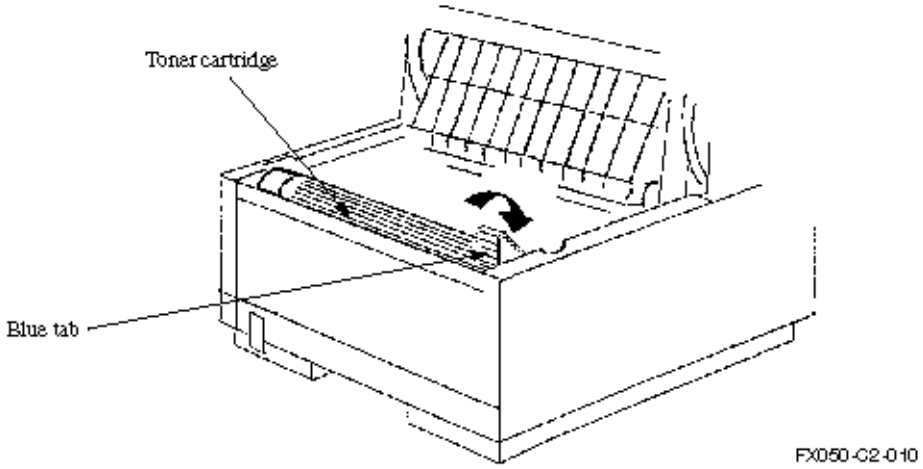

Figure 2.5.5 Toner Cartridge Installation (5)

- Clean the toner scattered in the vicinity of the toner cartridge using a cloth moistened with cold water. Do not use hot water since it makes the toner stick.

- Close the copy stacker so that both latches are locked completely.

Copyright 1997, Okidata, Division of OKI America, Inc. All rights reserved. See the OKIDATA Business Partner Exchange (BPX) for any updates to this material. (http://bpx.okidata.com)

Recording paper

Note: About 250 sheets of the new paper can be set in the recording paper cassette.

- Remove the paper cassette from the facsimile by pulling it straight out.

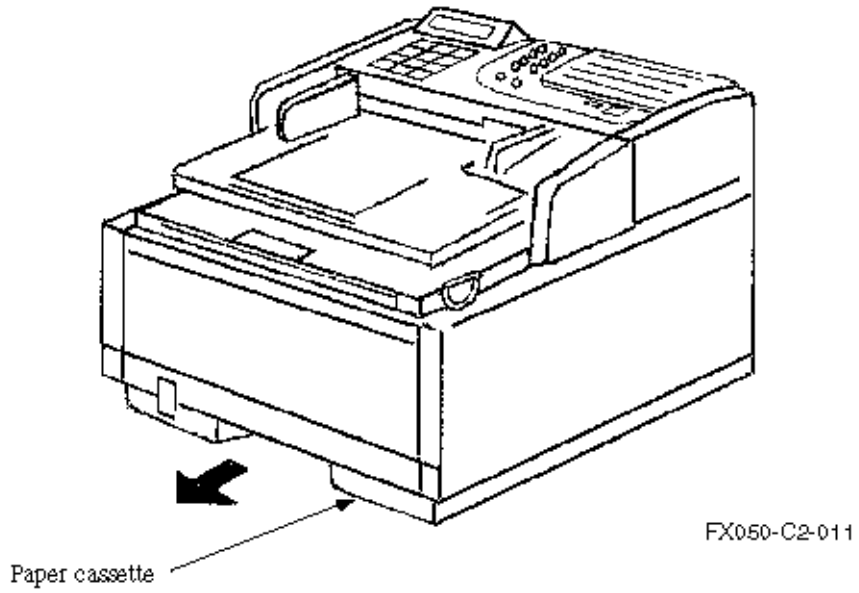

Figure 2.5.6 Recording Paper Cassette Installation (1)

- Sheets must not exceed the paper full marker of the new paper limit indication. If excessive sheets are loaded, it will cause paper jams.
- After loading the new paper, push the cassette forward into the slot at the front of the facsimile until it locks.

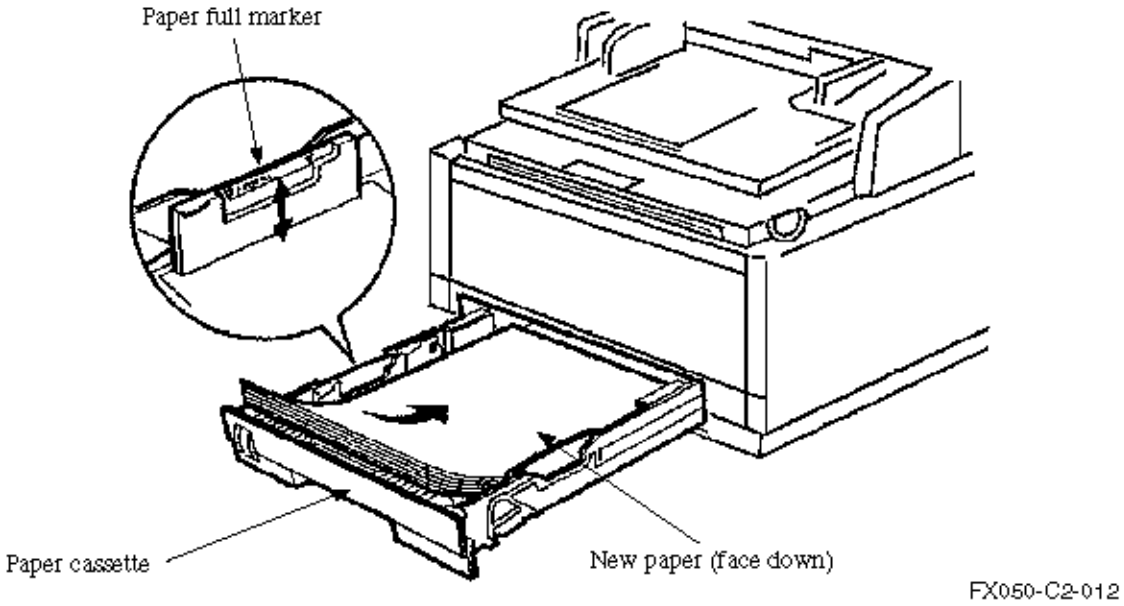

Figure 2.5.7 Recording Paper Cassette Installation (2)

Copyright 1997, Okidata, Division of OKI America, Inc. All rights reserved. See the OKIDATA Business Partner Exchange (BPX) for any updates to this material. (http://bpx.okidata.com)

Document stacker

- Hang the document stacker onto the stacker pins.

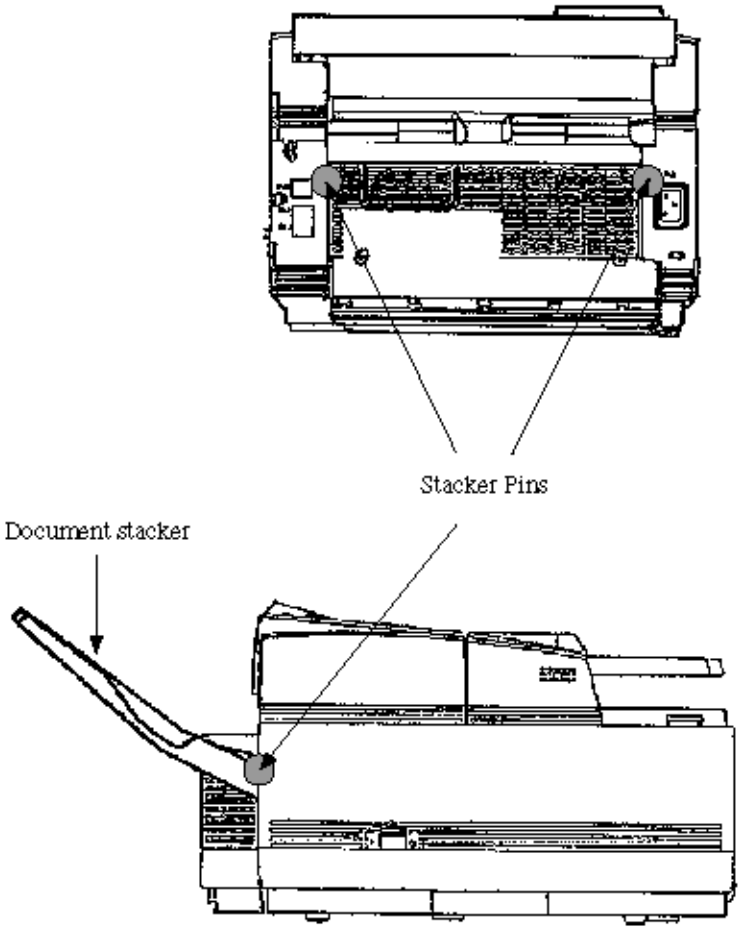

Figure 2.5.8 Document Stacker Installation

Copyright 1997, Okidata, Division of OKI America, Inc. All rights reserved. See the OKIDATA Business Partner Exchange (BPX) for any updates to this material. (http://bpx.okidata.com)

2.6 AC Cord Connection

The power supply is provided as follows.

Nominal input voltage 120VAC (Voltage range 102 to 127VAC)

Check whether the AC voltage of your input is within the above-mentioned voltage range and if so, check that the power switch is turned OFF. After turning off the power switch, connect the female plug of the AC cord to the machine and insert the male plug of the AC cord to the inlet receptacle. Turn the power switch ON and check that the display shows "(Time)" message indicating the standby mode.

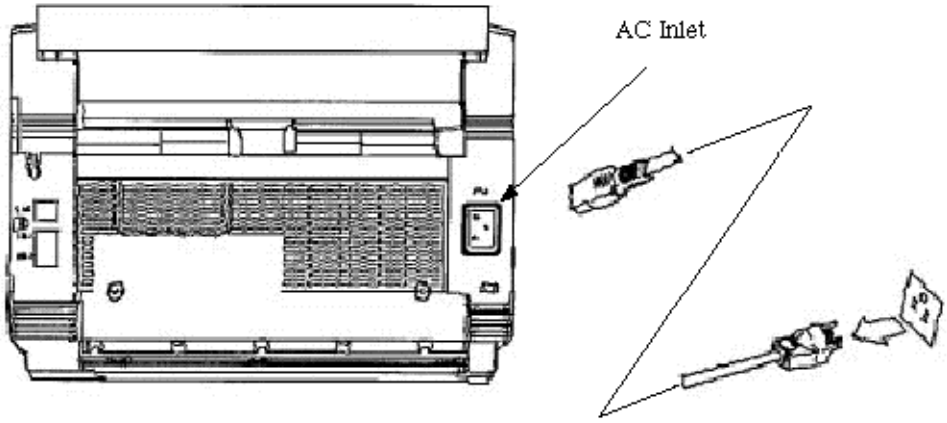

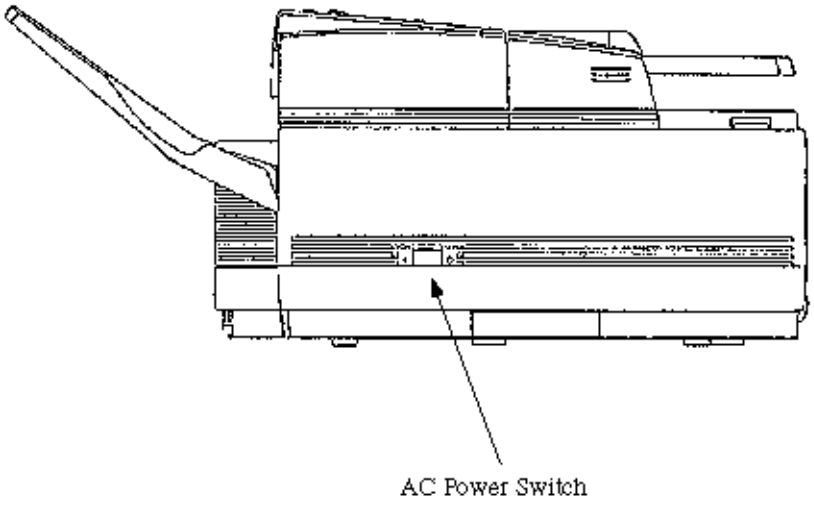

Copyright 1997, Okidata, Division of OKI America, Inc. All rights reserved. See the OKIDATA Business Partner Exchange (BPX) for any updates to this material. (http://bpx.okidata.com)

2.7 Telephone and Line Connections

2.7.01 Procedure

- Connect the lines.

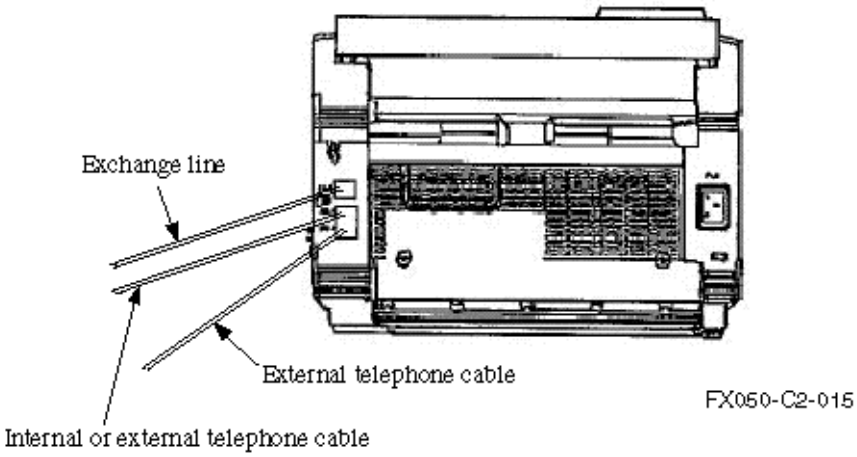

Note: For US version, telephone cable can be inserted into either upper side or lower side of telephone terminal.

Figure 2.7.1 Telephone and Line Connections

Copyright 1997, Okidata, Division of OKI America, Inc. All rights reserved. See the OKIDATA Business Partner Exchange (BPX) for any updates to this material. (http://bpx.okidata.com)

2.8 Packing for Shipment

CAUTION: When packing the OKIFAX 1050/2350/2450 for shipment, **REMOVE THE IMAGE DRUM AND TONER FROM THE UNIT AND SHIP SEPARATELY! Failure to do this will result in damage to the machine.**

Copyright 1997, Okidata, Division of OKI America, Inc. All rights reserved. See the OKIDATA Business Partner Exchange (BPX) for any updates to this material. (http://bpx.okidata.com)

B. Programming and Initial Settings

2.9 Initial Settings

2.9.1 General Procedure of Key Operation

Figure 2.9.1 shows the general procedure of key operation.

Figure 2.9.1 General Procedure of Key Operations

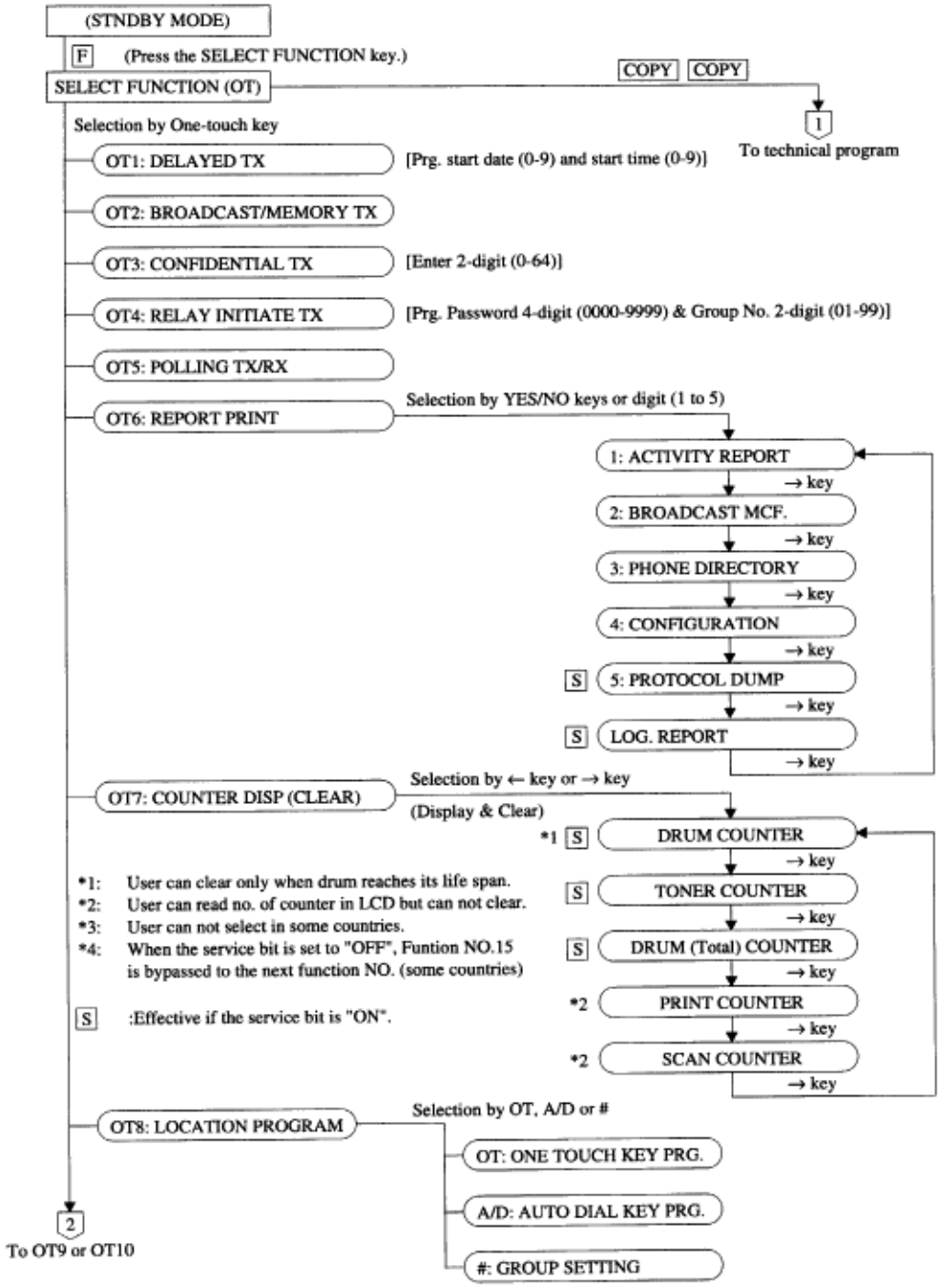

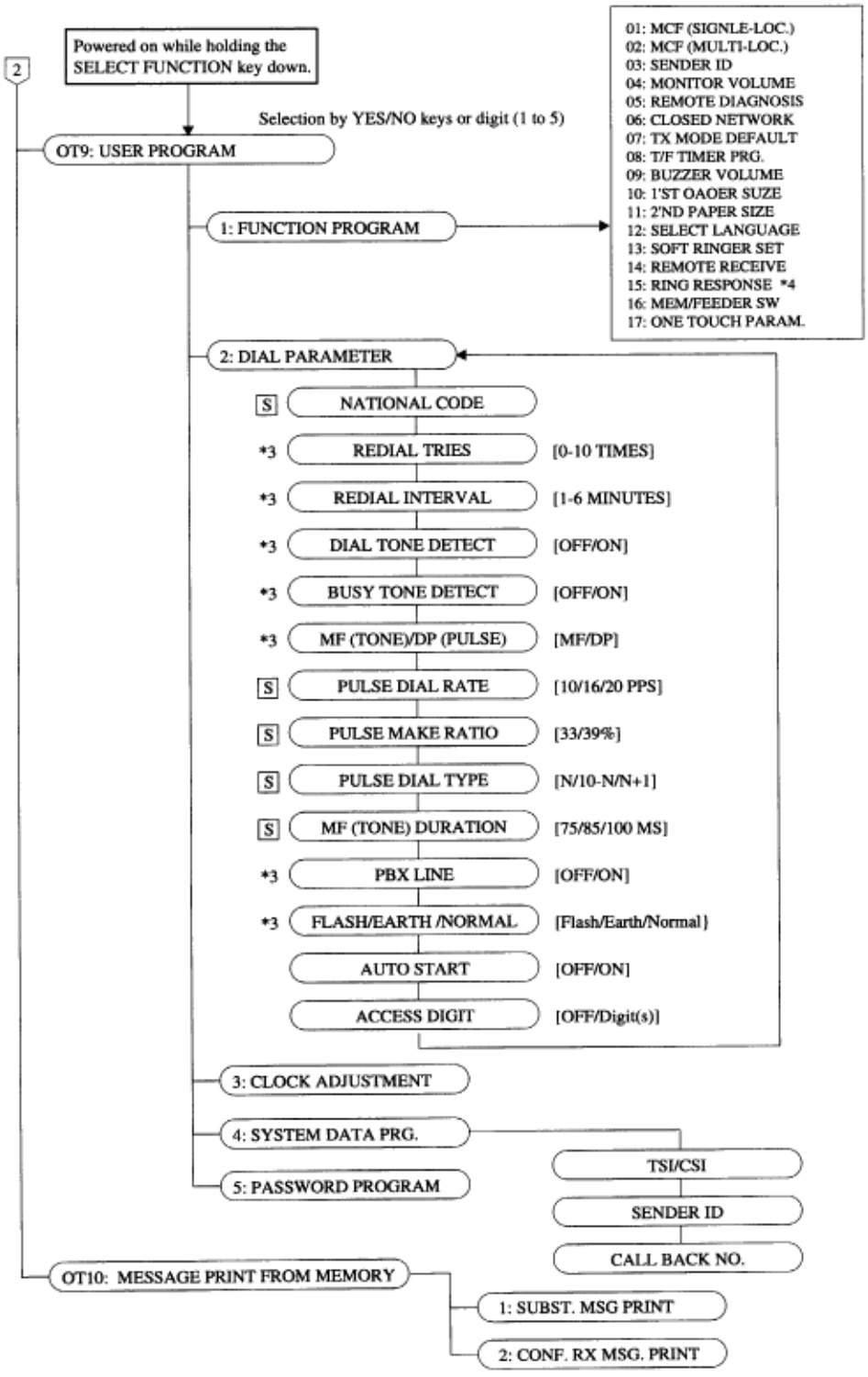
2
Powered on while holding the SELECT FUNCTION key down.
Selection by YES/NO keys or digit (1 to 5)
OT9: USER PROGRAM
1: FUNCTION PROGRAM
01: MCF (SIGNLE-LOC.)
02: MCF (MULTI-LOC.)
03: SENDER ID
04: MONITOR VOLUME
05: REMOTE DIAGNOSIS
06: CLOSED NETWORK
07: TX MODE DEFAULT
08: T/F TIMER PRG.
09: BUZZER VOLUME
10: 1'ST OAOER SUZE
11: 2'ND PAPER SIZE
12: SELECT LANGUAGE
13: SOFT RINGER SET
14: REMOTE RECEIVE
15: RING RESPONSE *4
16: MEM/FEEDER SW
17: ONE TOUCH PARAM.
2: DIAL PARAMETER
S NATIONAL CODE
*3 REDIAL TRIES [0-10 TIMES]
*3 REDIAL INTERVAL [1-6 MINUTES]
*3 DIAL TONE DETECT [OFF/ON]
*3 BUSY TONE DETECT [OFF/ON]
*3 MF (TONE)/DP (PULSE) [MF/DP]
S PULSE DIAL RATE [10/16/20 PPS]
S PULSE MAKE RATIO [33/39%]
S PULSE DIAL TYPE [N/10-N/N+1]
S MF (TONE) DURATION [75/85/100 MS]
*3 PBX LINE [OFF/ON]
*3 FLASH/EARTH /NORMAL [Flash/Earth/Normal]
AUTO START [OFF/ON]
ACCESS DIGIT [OFF/Digit(s)]
3: CLOCK ADJUSTMENT
4: SYSTEM DATA PRG.
5: PASSWORD PROGRAM
TSI/CSI
SENDER ID
CALL BACK NO.
OT10: MESSAGE PRINT FROM MEMORY
1: SUBST. MSG PRINT
2: CONF. RX MSG. PRINT

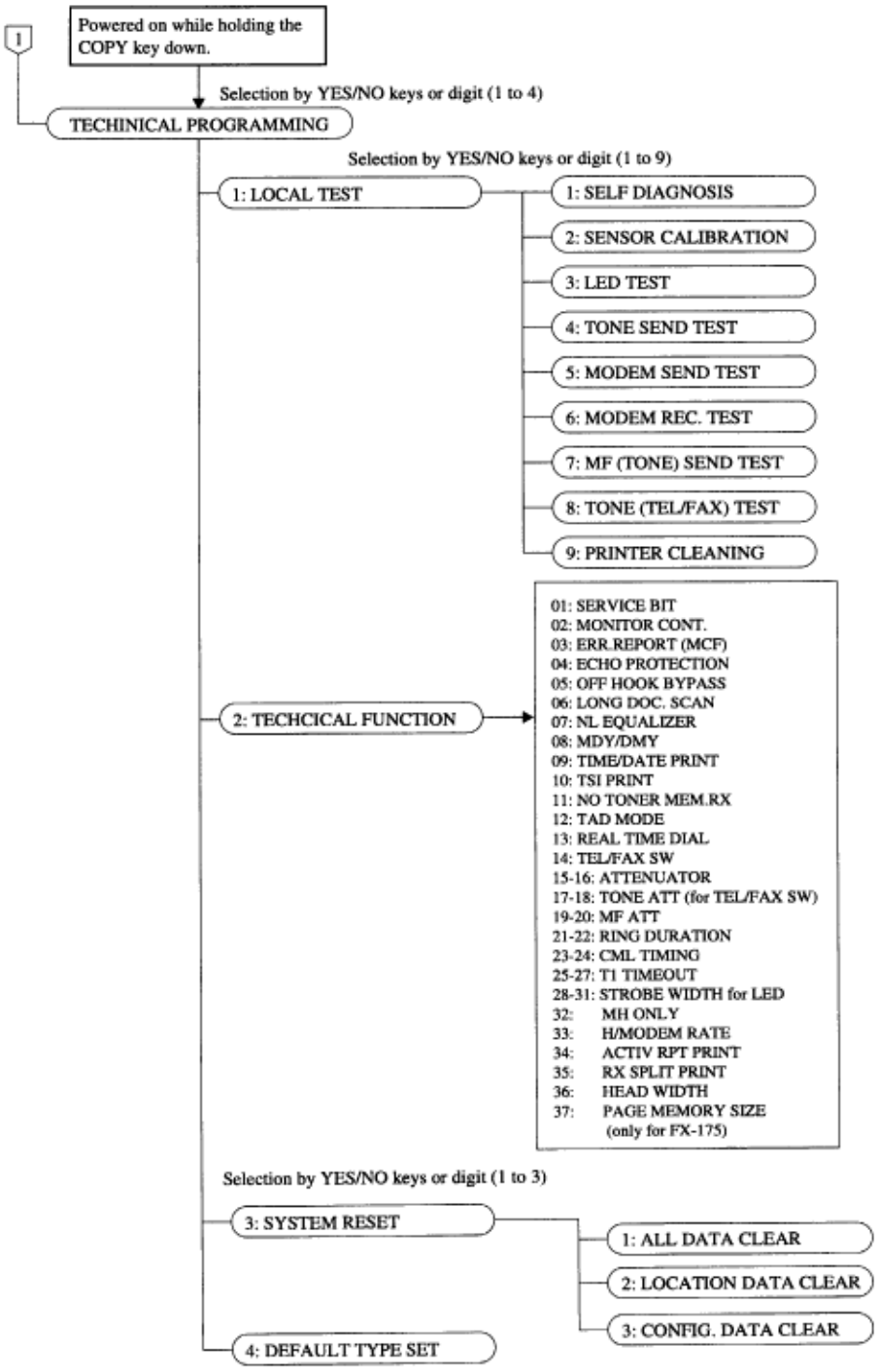

Copyright 1997, Okidata, Division of OKI America, Inc. All rights reserved. See the OKIDATA Business Partner Exchange (BPX) for any updates to this material. (http://bpx.okidata.com)

2.9.2 Technical Functions

This section explains setting items generally conducted by service personnel, not by users.

Table 2.9.1 shows the initial setting items and their purposes. (The default setting is different by the individual countries.) Each item can be accessed by entering the corresponding service number on Technical Function.

The detailed procedures of the initial setting items will be explained on the following pages.

Note: **S-ON:** Effective if the service bit has been set to ON.
FP: Function program setting
TF: Technical function setting

The display shows:
(For Example)

* 1	01	02	03	04	05	06	07	08	09	10	11	12	13	14	15	16	17	18	19	20
* 2	0	1	0	0	0	0	1	0	0	0	0	2	1	5	0	9	0	0	1	1
* 3	1	1	0	3	0	5	9	0	1	1	0	0	1	0	0	0	0			
* 1	21	22	23	24	25	26	27	28	29	30	31	32	33	34	35	36	37	38	39	40

Note 1: *1: Technical Function Number.
*2: Function assignment of LCD upper row.
*3 Function assignment of LCD lower row.

Note 2:
OFF=0, ON=1
MDY=0, DMY=1
without EQL=0, EQL1=1, EQL2=2, EQL3=3 (for cable EQL)
OFF=0, TYPE1=1, TYPE=2 (for REAL TIME DIAL and TAD MODE)
OFF=0, ONCE=1, ALL=2 (for TIME/DATA PRINT)
0dB~15dB=00~15(ATTENUATOR etc.)
100ms~990ms=10~99 (for RING DURATION: x 10ms)
100ms~1900ms=01~19 (for CML TIMING: x 100ms)
000sec.~255sec.=000~255 (T1 TIMEOUT VALUE: x 1sec.)
14.4k=0, 9.6k=1, 4.8k=2
LEGAL=0, A4=1
208MM=0, 216MM=1

Table 2.9.1 (1/8) Service Personnel Initial Settings

TF No.	No.	Item	Specifications	Default	
	01	Service bit	Switching serviceman/user operation. ON (1): Service personnel's features are available. OFF (0): Service personnel's features are not available. To enable or disable the following functions: • Drum (Total) and toner counter clear • Protocol dump • Dial parameters	OFF (0)	
	02	Line monitor control	Changing the audible monitoring range. FP +04 (To select the loudness of monitoring) ON (1): Enable OFF (0): Disable **Note:** In case of transmission mode, the monitor will be available during dialing, but the monitor will be switched off automatically after the elapse of specified time (about 5 sec.).	(0)	OFF
	03	Error report (MCF) MCF: Message Confirmation Report	Enables or disables the automatic printing of the message confirmation report upon a communicationerror. ON (1): Printing the error report. An error report which is different from FP No. 2 is printed out for each single location. OFF (0): Disable	OFF (0)	
	04	Echo protection	Enables echo suppression for poor lines with echo, usually during overseas transmission. This bit setting controls the following features.	OFF (0)	

Echo Protection	OFF (0)	ON (1)
Ignore 1st DIS	OFF	ON
CED-DIS timer	75 ms	1.5 sec
Tone for echo	OFF	ON

	05	Off-hook bypass	Allows two machines to be connected back to back for testing purposes.	(0)	OFF

ON (1): Enable
OFF (0): Disable

06	Long document SCAN	Enables the transmission of long-size document (more than 14" (356 mm). ON (1): Unlimited OFF (0): 14" (356 mm.)	OFF (0)
07	Cable equalizer	Determining the adequate equalizing level of the cable. EQL1, EQL2, EQL3 and without EQL are selectable.	

Setting value	Setting for OKIFAX 2350 and OKIFAX 2350 with 14.4 Kbps modem	Setting for OKIFAX 1050 and OKIFAX 2350 with 9.6Kbps modem
0	without EQL	without EQL
1	EQL1	EQL3 *1
2	EQL2	EQL3 *1
3	EQL3	EQL3 *1

*1: The equalizer is effective for both sending and receiving sides.

Note: By this adjustment you can tune up your equipment to the inversed characteristic of the cable. Figure 2.9.2 shows the characteristics of the cable equalizer.

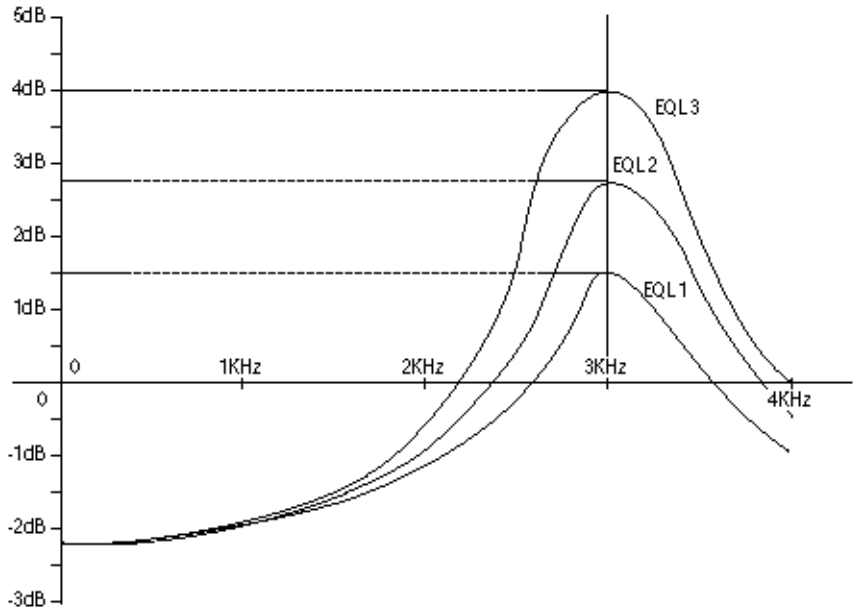

Figure 2.9.2 Characteristics of the Cable Equalizer (EQL1, EQL2 and EQL3)

08	MDY/DMY	Switches LCD display and report print	MDY

		from month/day/year to day/month/year or vice versa. MDY=0, DMY=1	(0)
09	Time and date print	Enables or disables the function of printing local date and time at the top of the received page. **Note:** User programming of this function is an FCC requirement.	OFF (0)

Time and date print	Setting
OFF	0
ONCE	1
ALL pages	2

		Note: Set at receiver. Except memory reception.	
10	TSI print	Enables the printing of TSI data from a remote fax onto the received pages. TSI is printed at the leading edge of first reproduced copy. (Set at receiver.) When TF09 is set to "ALL", TSI is printed for the all received pages. ON (1): Enable OFF (0): Disable (Reference) TSI; Transmitting Subscriber Identification	ON (1)
11	No-toner memory reception	Enables or disables the memory reception when the fax is in no toner condition. When TF09 is set to "ALL", TSI is printed for the all received pages. ON (1): Enable OFF (0): Disable (Reference) TSI; Transmitting Subscriber Identification	ON (1)
11	No-toner memory reception	Enables or disables the memory reception when the fax is in no toner condition. ON (1): The messages are printed when toner has been newly supplied or an operator per-forms the memory operation (OT10).	ON (1)

OFF (0): The messages are printed in the print mode. But print quality is not guaranteed.

12 TAD mode (For external telephone answering device). Allows the OKIFAX to share a telephone line with an answering device. TYP2 (2)

TAD mode is of two types (TYPE1/TYPE2).

TAD mode	Setting
OFF	0
TYPE1	1
TYPE2	2

TYPE1 means:
1. RING comes.
2. The TAD answers, returns the recorded voice mes-sage in TAD to calling party.
3. The FAX machine will continue to detect CNG while TAD works.
4. If the FAX machine detects CNG signal, the fax will go into normal receiving mode.
5. Even though the fax does not detect CNG signal, the fax will go to receiving mode when answering machine disconnects.

TYPE2 means:
Same as TYPE1 (above) except No. 5 (listed below).

5. If the fax does not detect CNG signal during TAD operation, the machine will go to standby mode.

13 Real time dialing Enables or disables this feature. 3 types selectable. TYP2 (2)

Type	**Setting**
OFF	0
TYPE1	1
TYPE2	2

TYPE1: Real-time dialing is available when the optional telephone handset is OFF-HOOK.
TYPE2: Real-time dialing is available when the optional telephone handset is OFF-HOOK or

		HOOK key is pressed.	
14	TEL/FAX switching	Enables or disables the TEL/FAX automatic switching. If this function is disabled, TEL/FAX mode will not appear as a receive option. ON (1): Enable OFF (0): Disable (Related item: FP08, TF17-18)	ON (1)
15 16	Modem attenuator	Adjusts the attenuation (dB) for the message send signal power level. Adjusting value is 0 to 15 dB in one dB steps. Since the maximum send signal power level (dB) of the fax is at 0 dB, you can select 0 dB to -15 dB in one dB steps for the send signal power level. **Note:** The send signal power level should meet your country's regulation. Some countries may specify the power level at a telephone exchange. In that case, you should subtract the specified level from the line cable attenuation to determine the send level of your fax.	10 dB

Bit 15	Bit 16	dB
0	0	0
0	1	1
0	2	2
0	3	3
0	4	4
0	5	5
0	6	6
0	7	7
0	8	8
0	9	9

Bit 15	Bit 16	dB
1	0	10

1	1	11
1	2	12
1	3	13
1	4	14
1	5	15

17	T/F tone attenuator	Adjusts the attenuation (dB) for the tone send signal	10 dB
18	(for TEL/FAX SW)	for TEL/FAX switching. Adjusting value is 0 to 15 dB in one dB steps.	

Bit 17	Bit 18	dB
0	0	0
0	1	1
0	2	2
0	3	3
0	4	4
0	5	5
0	6	6
0	7	7
0	8	8
0	9	9

Bit 17	Bit 18	dB
1	0	10
1	1	11
1	2	12
1	3	13
1	4	14
1	5	15

T.F. No.	**Item**	**Specifications**	**Default**

19 20	MF attenuator	Adjusts the attenuation (dB) for the send MF tone power level. Adjusting value is 0 to 15 dB in one dB	6 dB

Bit 19	Bit 20	dB
0	0	0
0	1	1
0	2	2
0	3	3
0	4	4
0	5	5
0	6	6
0	7	7
0	8	8
0	9	9

Bit 19	Bit 20	dB
1	0	10
1	1	11
1	2	12
1	3	13
1	4	14
1	5	15

T.F. No.	**Item**	**Specifications**	**Default**
21 22	Ring duration detection time	Selects the minimum ring detection time to meet country's requirements. Adjusting time is 100 MS to 990 MS in 10 MS steps.	120 (MS)

For example: (120 ms)

Bit 21	Bit 22
1	2

12 x 10 ms = 120 ms

T.F. No.	Item	Specifications	Default
23	CML timing	Selects the time from end of ring to CML-ON. Adjusting time is 100 MS to 1900 MS in 100 MS steps.	300 (MS)

24

For example: (300 ms)

Bit 23	Bit 24
0	3

03 x 100 ms = 300 ms

T.F. No.	Item	Specifications	Default
25 26 27	T1, timeout value (XTTO value)	Registers the time duration (in seconds) for which the fax waits for the remote station's answer. This timer starts when the last dial digit has been sent in the automatic transmission mode. As the special case, when 000 is selected, the following predetermined values will be used. * Selects the 3 digit timer (000 to 255 sec)	59 (Sec)

For example: (59 sec)

Bit 25	Bit 26	Bit 27
0	5	9

T.F. No.	Item	Specifications	Default

28 29 30 31	Strobe for LED head	Setting of LED print head strobe signal. **Note 1:** When the rank marking of the new re-placed LED print head (new part) is same as that of the old used LED print head (old part), you do not always have to set the LED print head strobe signal. **Note 2:** Intensity ranking is determined by the first, second and third digits from the right on the LED print head serial number (i. e. in S/N .....056, 056 is the intensity ranking.)	0110

	Technical Function	**No. 31**	0	1	0	1	0	1	0	1	0	1	0	1	0	1	0	1
		No. 30	0	0	1	1	0	0	1	1	0	0	1	1	0	0	1	1
		No. 29	0	0	0	0	1	1	1	1	0	0	0	0	1	1	1	1
		No. 28	0	0	0	0	0	0	0	0	1	1	1	1	1	1	1	1
Rank Marking																		
~ 056			*															
057 ~ 063				*														
064 ~ 071					*													
072 ~ 080						*												
081 ~ 090							*											
091 ~ 101								*										
102 ~ 113									*									
114 ~ 127										*								
128 ~ 143											*							

144 ~ 160												*					
161 ~ 180													*				
181 ~ 202														*			
203 ~ 227															*		
228 ~ 256																*	
257 ~ 287																	*
288 ~																	*

T.F. No.	Item	Specifications	Default
32	MH only	Switches the function of limiting image compres-sion only to the MH codes. ON (1): Coding scheme is MH only. When the receiving image data is affected by noise on the telephone line. OFF (0): Any of MH, MR and MMR.	OFF (0)
33	High-speed modem rate	Specifies the modem's starting speed, 14.4k, 9.6k, or 4.8kbps. When 9.6k modem is installed, the default value is set to "9.6k (1)".	14.4k (0)

Modem Rate	Setting
14.4 k	0
9.6 k	1
4.8 k	2

T.F. No.	Item	Specifications	Default

34	ACTIV RPT PRINT (activity report print)	Enables or disables the automatic printing of the activity report when 30 communications have been recorded in the internal memory. ON (1): Automatic printing OFF (0): Disable	14.4k (0)
35	RX split print	Specifies whether to print a received document longer than the recording paper size with splitting into the upper and lower parts or to print it only for the portion covered by one recording paper sheet without splitting. ON (1): Splitting OFF (0): No splitting.	OFF (0)
36	Head width	You should confirm the head width by the following table, and then select it by this setting. (Refer to 4.2.1.)	8.19" (208 MM) (0)

Head width	Head label	Setting
8.19" (208 mm)	1115G2	0
8.5" (216 mm)	A4 200	1

T.F. No.	**Item**	**Specifications**	**Default**
37	Page memory size (only for OKIFAX 2450)	Selects the page memory size for A4 and LEGAL in order to use the message memory effectively. LEGAL (1): Available LEGAL A4 (0): Not available LEGAL **Note:** In OKIFAX 2450, if you print out Legal size documents, you should select LEGAL setting. Reduction from LEGAL to LETTER is avail-able only when Legal size is selected by this function.	LEG (0)

Copyright 1997, Okidata, Division of OKI America, Inc. All rights reserved. See the OKIDATA Business Partner Exchange (BPX) for any updates to this material. (http://bpx.okidata.com)

2.9.2.02 TEL/FAX automatic switching

This function is used for the purpose of TEL/FAX automatic switching as follows.
If the machine detects a call with a **CNG** signal indicating an auto send facsimile call, it starts an automatic document receiving operation.

If machine detects a call without a **CNG** signal, machine generates the buzzer sounds as a telephone call. The calling person can hear a ring back tone for up to 35 seconds.

If the operator at the called side does not lift the handset within 35 seconds, the machine automati-cally starts a document receiving operation. Voice conversation will automatically be available through the internal handset by lifting up the handset while the call buzzer is sounding.

Note: In this mode, following four settings are required.

1: The predetermined time is selectable between 20 or 35 sec. (Function program No. 08)

2: No ringing signal is sent to the external telephone handset.

Copyright 1997, Okidata, Division of OKI America, Inc. All rights reserved. See the OKIDATA Business Partner Exchange (BPX) for any updates to this material. (http://bpx.okidata.com)

2.9.2.03 TAD mode

TAD: Telephone Answering Device

TAD can be connected to external telephone terminal to record your messages.

TAD records your speech and switches an automatic voice message response to the calling station.

Note 1: A choice of TAD mode is available by Technical Function No. 12.

Note 2: The predetermined time is selectable between 20 or 35 sec. (35 seconds is recommended for proper operation)

Note 3: Choice of message sending level. The level is selectable from 0 to 15 dB in one dB step. (Technical function No. 17, 18)

Copyright 1997, Okidata, Division of OKI America, Inc. All rights reserved. See the OKIDATA Business Partner Exchange (BPX) for any updates to this material. (http://bpx.okidata.com)

TEL/FAX mode flow chart

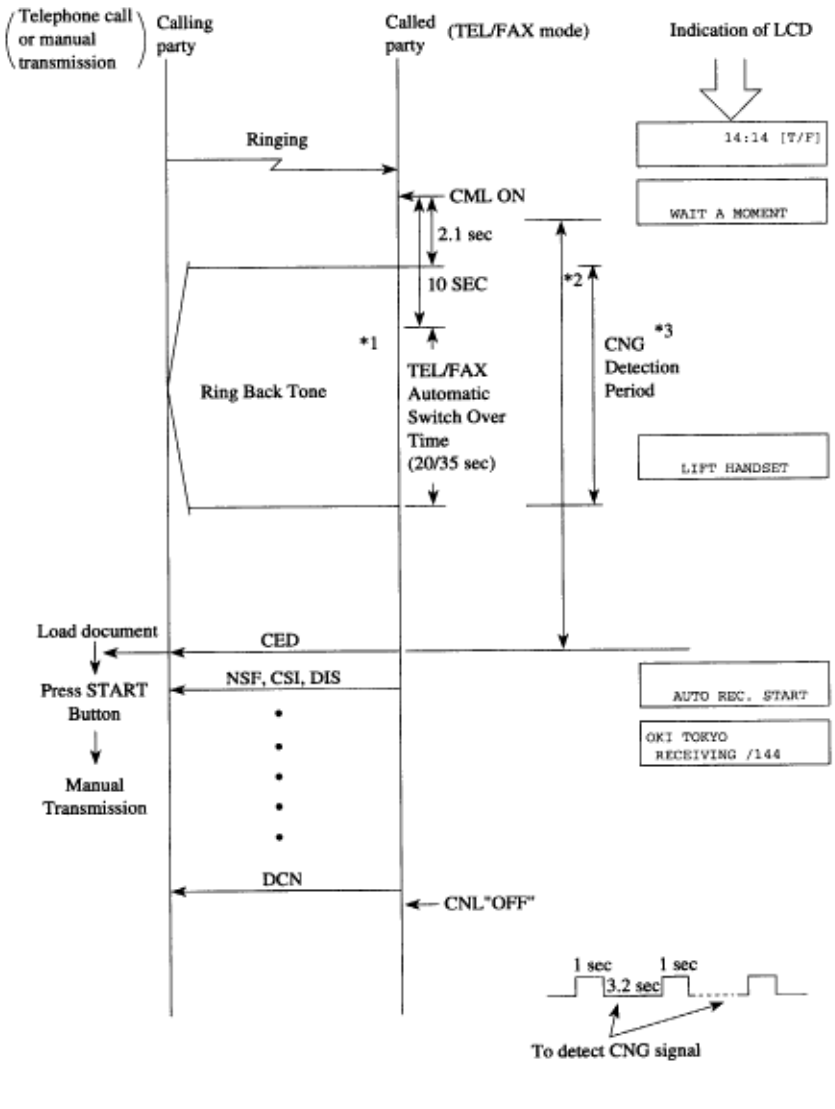

FX050-C2-018

Notes:

*1: Ring Back Tone 1 sec. ON, 3.2 sec. OFF

*2: When you want to talk by phone, pick up handset.

*3: The called party can send CED to the calling party immediately to start FAX communication if the CNG is detected during the period.

*4: If the fax does not detect CNG signal during working of TEL/FAX mode, LCD display indicates "LIFT HANDSET".

Copyright 1997, Okidata, Division of OKI America, Inc. All rights reserved. See the OKIDATA Business Partner Exchange (BPX) for any updates to this material. (http://bpx.okidata.com)

TAD mode flow chart

- In case of TYPE 1;

Even though the fax does not detect CNG signal, the fax will go to receiving mode.

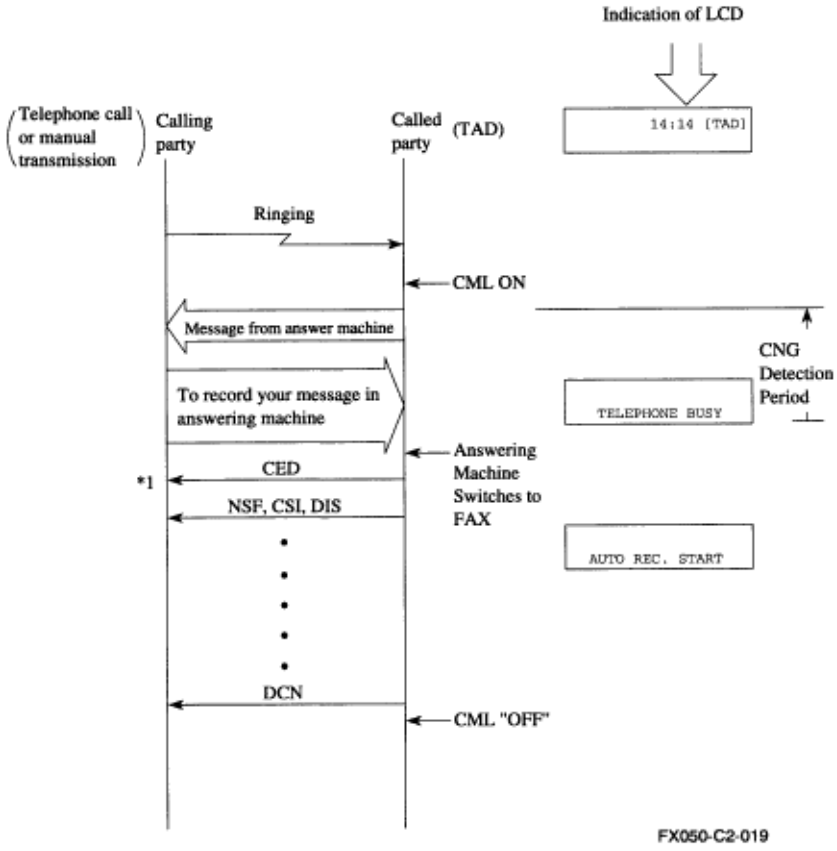

*1 To enable the manual TX mode.
Load document → Press START button → Manual transmission

*1 To enable the manual TX mode.

Load document ---> Press **START** button ---> Manual transmission

Copyright 1997, Okidata, Division of OKI America, Inc. All rights reserved. See the OKIDATA Business Partner Exchange (BPX) for any updates to this material. (http://bpx.okidata.com)

TAD mode flow chart

- In case of TYPE 2:

If the fax does not detect **CNG** signal during working of TAD, the machine will go to standby mode.

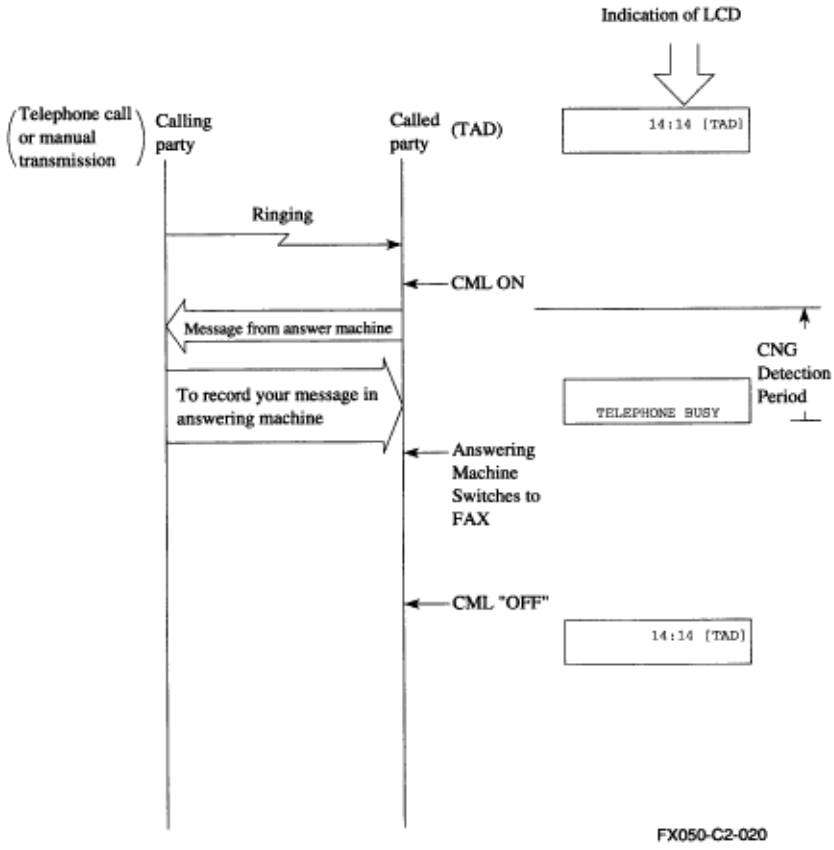

Copyright 1997, Okidata, Division of OKI America, Inc. All rights reserved. See the OKIDATA Business Partner Exchange (BPX) for any updates to this material. (http://bpx.okidata.com)

2.9.3 Technical Functions Example

2.9.3.01 Service Bit Setting

Purpose

To enable or disable the following functions:
Drum and toner counter display (clear)
Service default report printing
Protocol dump report printing
Ring response time setting
Dial parameters setting
Printer counters clearing

Procedure

Operations:

- To bring the LCD up to the desired message press SELECT FUNCTION key once, COPY key twice and "2" key. (In case of no message in memory)
- Press the ↵ key.
- Service bit setting is T.F. No. 1.
- Set to "1 (ON)" or "0 (OFF)" by using Ten-key pad and press the START key to register.

The display shows:

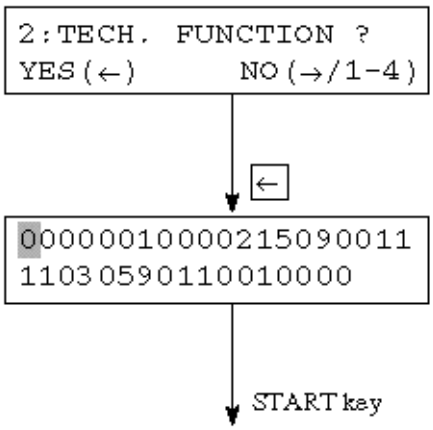

Reference: See Figure 2.9.1 in the next section for the general operation flow.

Copyright 1997, Okidata, Division of OKI America, Inc. All rights reserved. See the OKIDATA Business Partner Exchange (BPX) for any updates to this material. (http://bpx.okidata.com)

2.9.3.02 Technical functions

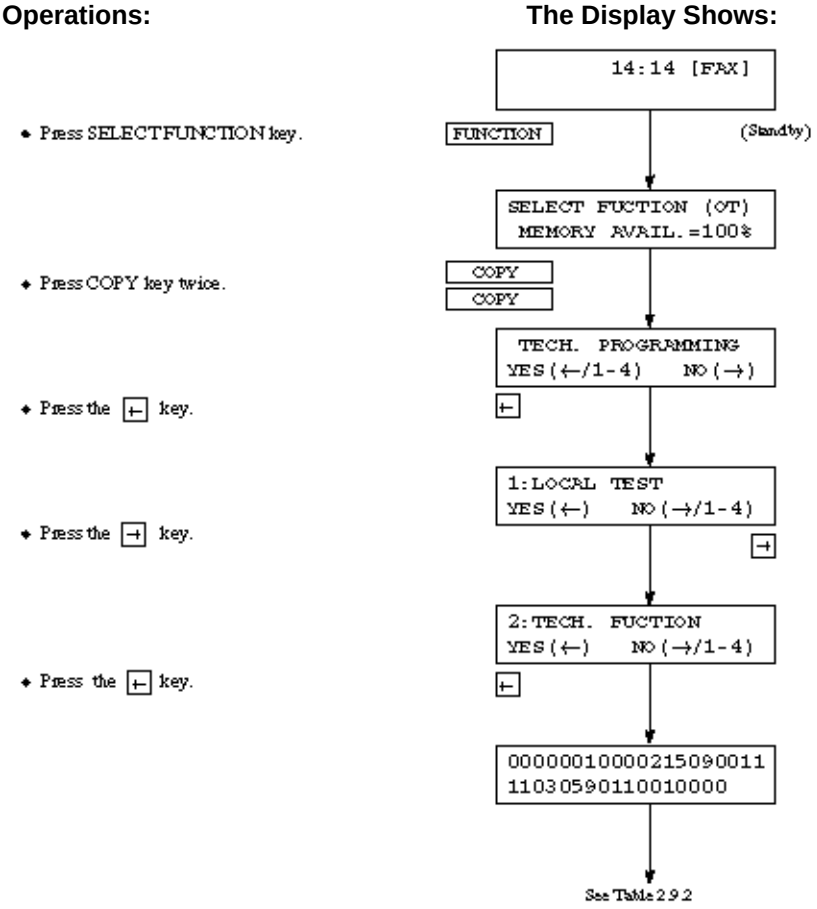

Figure 2.9.1 General Operation Flow

Copyright 1997, Okidata, Division of OKI America, Inc. All rights reserved. See the OKIDATA Business Partner Exchange (BPX) for any updates to this material. (http://bpx.okidata.com)

Table 2.9.2 (1/3) Technical Functions

T.F No.	Name of Function	The Display Shows
01	Service bit	00000010000210090011 11030590110010000 Setting: 0 (OFF), 1 (ON)
02	Line monitor control	00000010000210090011 11030590110010000 Setting: 0 (OFF), 1 (ON)
03	Error report (MCF) MCF: Message Confirmation Report	00000010000210090011 11030590110010000 Setting: 0 (OFF), 1 (ON)
04	Echo protection	00000010000210090011 11030590110010000 Setting: 0 (OFF), 1 (ON)
05	Off-hook bypass	00000010000210090011 11030590110010000 Setting: 0 (OFF), 1 (ON)
06	Long document transmission	00000010000210090011 11030590110010000 Setting: 0 (OFF), 1 (ON)
07	Non-loaded (NL) cable equalizer	00000010000210090011 11030590110010000 08
08	MDY/DMY format	00000010000210090011 11030590110010000 Setting: 0 (MDY), 1 (DMY)

09	Time and date print	0000001000210090011 1103059011001000 Setting: 0 (OFF), 1 (ONCE), 2 (ALL page)

Copyright 1997, Okidata, Division of OKI America, Inc. All rights reserved. See the OKIDATA Business Partner Exchange (BPX) for any updates to this material. (http://bpx.okidata.com)

Table 2.9.2 (2/3) Technical Functions

T.F No.	Name of Function	The Display Shows
10	TSI print	0000001000210090011 1103059011001000 Setting: 0 (OFF), 1 (ON)
11	No toner memory reception	0000001000210090011 1103059011001000 Setting: 0 (OFF), 1 (ON)
12	TAD mode (For external telephone asnwering device.)	0000001000210090011 1103059011001000 Setting: 0 (OFF), 1 (TYPE1), 2 (TYPE2)
13	Real-time dialling	0000001000210090011 1103059011001000 Setting: 0 (OFF), 1 (TYPE1), 2 (TYPE2)
14	TEL/FAX switching	0000001000210090011 1103059011001000 Setting: 0 (OFF), 1 (ON)
15 16	Modem attenuator	0000001000210090011 1103059011001000 Setting: 00 (OdB)~15 (15dB) Refer to 2.9.1 Service Personnel Initial Setting
17 18	T/F tone attenuator	0000001000210090011 1103059011001000 Setting: 00 (OdB)~15 (15dB) Refer to 2.9.1 Service Personnel Initial Setting

19 20	MF attenuator	0000001000021009001111030590110010000 Setting: 00 (OdB)~15 (15dB) Refer to 2.9.1 Service Personnel Initial Setting
21 22	Ring duration detection time	0000001000021009001111030590110010000 Setting: 10 (100ms)~99 (990ms), 10 ms steps

Copyright 1997, Okidata, Division of OKI America, Inc. All rights reserved. See the OKIDATA Business Partner Exchange (BPX) for any updates to this material. (http://bpx.okidata.com)

Table 2.9.2 (3/3) Technical Functions

T.F No.	Name of Function	The Display Shows
23 24	CML timing	0000001000021009001 1 1103059011001 0000 Setting: 0 (100ms)~19 (1900ms), 100ms steps.
25 26 27	T1, timeout value (XTTO value)	0000001000021009001 1 1103059011001 0000 Setting: 000 (000 sec)~255(255sec)
28 29 30 31	Strobe width for LED head	0000001000021009001 1 1103059011001 0000 Setting: 0 (OFF), 1 (ON)
32	MH only	0000001000021009001 1 1103059011001 0000 Setting: 0 (OFF), 1 (ON)
33	High-speed modem rate	0000001000021009001 1 1103059011001 0000 Setting: 0 (14.4k), 1 (9.6k), 2 (4.8)k
34	Activity report print	0000001000021009001 1 1103059011001 0000 Setting: 0 (OFF), 1 (ON)
35	RX split print	0000001000021009001 1 1103059011001 0000 Setting: 0 (OFF), 1 (ON)

36	Head width	00000010000210090011 11030590110010000 Setting: 0 (208mm), 1 (216mm)
38 | 40	Not used	00000010000210090011 11130591100000

Copyright 1997, Okidata, Division of OKI America, Inc. All rights reserved. See the OKIDATA Business Partner Exchange (BPX) for any updates to this material. (http://bpx.okidata.com)

2.9.4 Users Functions

This section explains the items usually set up by general users.

Table 2.9.3 shows the initial setting items and their purposes.

Each F.P. can be accessed by entering the corresponding function number on Function Programming.

The detailed procedure of the initial setting items will be explained on the following pages.

Note:

S-ON: Effective if the service bit has been set on.
FP: Function program setting
TF: Technical function setting

Copyright 1997, Okidata, Division of OKI America, Inc. All rights reserved. See the OKIDATA Business Partner Exchange (BPX) for any updates to this material. (http://bpx.okidata.com)

Table 2.9.3 (1/6) Feature Specifications

No.	Item	Specifications
1	Auto dial 1) One-touch dial 2) Two-digit dial 3) Keypad dial 4) Chain dial 5) Mixed dial	10 one-touch keys are provided. (OKIFAX 1050) 15 one-touch keys are provided. (OKIFAX 2350) 30 one-touch keys are provided. (OKIFAX 2450) Max. 32 digits for each location number. In addition to an ordinary location number, another alternate loca-tion number can be registered in to each one-touch key. Purposes of this alternate location number: Fax dial A fax number is registered as an alternate location number. When a call to the first location number is not answered, the alternate location number will be automatically dialed. 40 different codes are provided. (OKIFAX 1050) 64 different codes are provided. (OKIFAX 2350) 99 different codes are provided. (OKIFAX 2450) * Two- digit location code: 01 to 40 (OKIFAX 1050) 01 to 64 (OKIFAX 2350) 01 to 99 (OKIFAX 2450) Max. 32 digits for each location number. With ten-key pad. Max. 40 digits for one operation The number of dialing digits can be expanded to longer digit num-bers by chaining any number of the above 1), 2) and 3). This func-tion works only with feeder transmissions. Type of dialing can be changed from pulse dial to tone dial half-way in dialing process. The changing point is specified by the * key.
2	Manual dial	With a telephone handset.

3	Receive mode 1) Auto receive mode 2) Manual receive mode 3) Telephone/fax automatic switchover	Selectable by key operation. Selectable by key operation. Selectable by key operation. The fax recognizes a fax call from a verbal call as follows: If the fax detects a call with a CNG signal, it starts an automatic document receive operation. If it detects a call without a CNG signal, it sounds the buzzer to indicate a voice call. Operator can answer the call by lifting the telephone handset. If he or she does not lift the handset within predetermined time (20 sec. or 35 sec.), the fax automatically starts a document receive operation. * FP + 08 (To determine the timer.)

Copyright 1997, Okidata, Division of OKI America, Inc. All rights reserved. See the OKIDATA Business Partner Exchange (BPX) for any updates to this material. (http://bpx.okidata.com)

Table 2.9.3 (2/6) Feature Specifications

No.	Item	Specifications
4	Automatic redial	PTT parameter setting disables or enables this feature, and specifies redial times and redial intervals. * See 2.9.12 for the service bit condition depending on PTT param-eters.
5	Last No. redial	REDIAL key is provided. There is no limit on number of repeat attempts.
6	Group dial	• 5 dialing groups (OKIFAX 1050) Max. 50 locations. • 10 dialing groups (OKIFAX 2350) Max. 79 locations. • 20 dialing groups (OKIFAX 2450) Max. 129 locations. Grouping some one-touch keys and some two-digit auto dial codes to which telephone numbers have been assigned. This group setting makes broadcast operation simple.
7	Telephone directory and location ID (Alpha search)	In addition to fax numbers, an alpha/ numeric name can be assigned to each of one-touch keys and two-digit dial codes, 01 to 40 for OKIFAX 1050, 01 to 64 for OKIFAX 2350 and 01 to 99 for OKIFAX 2450. This name is called a location ID. Any location ID can be searched and displayed on LCD. Then direct dialing to the IDs station can be performed. There are two methods of searching: (1) Search based on the first character specified. (2) Searching by displaying all registered location IDs one after another in the lexicographical order. Location ID: Max. 15 characters

8	Voice request	A voice request from the transmitter is available only upon completion of the total message transmission. A voice request from the receiver is available at the end of each page being received.
9	Local copy	Printing resolution: Horizontal: 8 PEL/mm Vertical: 7.7 line/mm or variable
10	Multiple local copy	Up to 99 copies.
11	Manual loading feeder	One single sheet from the feeder above the first recording paper cas-sette can be copied. (OKIFAX 2350/2450) Example of sheets: Transparency for an overhead projector 11 Manual loading feeder

Copyright 1997, Okidata, Division of OKI America, Inc. All rights reserved. See the OKIDATA Business Partner Exchange (BPX) for any updates to this material. (http://bpx.okidata.com)

Table 2.9.3 (3/6) Feature Specifications

No.	Item	Specifications
12	Broadcast (Memory transmission)	Max. 55 (OKIFAX 1050), Max. 84 (OKIFAX 2350) and Max. 134 (OKIFAX 2450) remote locations can be specified by the following means: One-touch keys (with or without a group list). Two-digit auto dial codes. Five-keypad dial number (manual dial locations) The combination of 5 delayed broadcast and one immediate broadcast is possible. When multiple locations are specified for one broadcast (1) The OKIFAX 1050/2350/2450 prints a broadcast entry re-port, if specified in operating sequence. (2) The OKIFAX 1050/2350/2450 can print a broadcast confirmation report. (FP + 02 To enable or disable this print-out)
13	Delayed transmission from the memory	The fax can automatically transmit documents at one/five specified times from the memory.
14	Polling transmission (To be polled)	Document(s) placed on the feeder can be collected by a remote station.
15	Polling reception	The fax can collect documents from one remote station.
16	Transmission preparation (Hopper)	An operator can prepare documents for transmission even while the fax is engaged in message reception. They will be automatically transmitted upon completion of the reception. An operator can also prepare documents for transmission during transmission from memory.

17	No toner reception	The fax can temporarily store received messages in memory when toner has run out. The messages are printed when toner has been newly supplied or an operator presses the SELECT FUNCTION key followed by the one-touch key No. 10 under the LCD message MSG. IN MEMORY/REPLACE TONER CART. in the standby mode. * TF + 11 (To enable or disable this function)
18	Smooth printing	The documents received in the STD mode can be printed at the FINE resolution by means of generating one line based on the two consecutive original lines and printing it between them.

Copyright 1997, Okidata, Division of OKI America, Inc. All rights reserved. See the OKIDATA Business Partner Exchange (BPX) for any updates to this material. (http://bpx.okidata.com)

Table 2.9.3 (4/6) Feature Specifications

No.	Item	Specifications
19	Dual Access (except OKIFAX 1050)	The documents for transmission can be read into the memory even while the fax is engaged in another memory transmission, reception in the ECM or non-ECM mode. 1) Operation of memory transmission while the fax is engaged in a communication (memory TX, memory RX or print mode RX). 2) Copy while the fax is engaged in a communication (memory TX or memory RX). Note: Condition for operation a) Copy is invalid when the machine is already engaged in an operation which is using or could use the printer. 3) Call reception while the fax is engaged in scanning docu-ments for memory transmission when the auto receive mode is in FAX or T/F mode, although TEL mode is not valid. Refer to sub-section 2.9.7 for dual access operation. For the patterns of dual access refer to the following, Dual Access Combination Table.

Copyright 1997, Okidata, Division of OKI America, Inc. All rights reserved. See the OKIDATA Business Partner Exchange (BPX) for any updates to this material. (http://bpx.okidata.com)

Table 2.9.3 (5/6) Feature Specifications

Dual Access Combination Table (1/2)

Machine Status / Dual Access		Program-ming	TX from Feeder		Scanning to Memory		TX from Memory			RX (non-ECM/ECM)				
										Paper		Memory		
			During Scanning	After Scanning	During Refeeding	During Scanning	During Dialing	During Hand-shaking	During Trans-mitting Message	During Hand-shaking	During Receiving Message	During Hand-shaking (→1st ϕ C)	During Hand-shaking (→1st ϕ C)	During Receiving Message
Programming		\	×	×	×	×	×	×	×	×	×	×	×	×
TX from Feeder	Setting	×	\	○	\	\	○	○	○	○	○	○	○	○
	Dial & TX	×	\	\	\	\	\	\	\	\	\	\	\	\
Polling RX	Setting	×	×	×	×	×	×	×	×	×	×	×	×	×
	Dial & RX	×	\	\	×	×	\	\	\	\	\	\	\	\
Scanning to Memory		×	\	○	\	\	○	○	○	○	○	○	○	○
TX from Memory		×	\	\	×	×	\	\	\	\	\	\	\	\
Auto Answer	RX to Paper	×	\	\	×	×	\	\	\	\	\	\	\	\
	RX to Memory	×	\	\	×	×	\	\	\	\	\	\	\	\
	Poll TX	×	\	\	×	×	\	\	\	\	\	\	\	\
Manual Answer	RX to Paper	×	\	\	×	×	\	\	\	\	\	\	\	\
	RX to Memory	×	\	\	×	×	\	\	\	\	\	\	\	\
	Poll TX	×	\	\	×	×	\	\	\	\	\	\	\	\
Copy	Page by Page	×	\	×	\	\	×	×	×	×	×	×	×	×
Manual Message Print	Setting	×	×	×	×	×	×	×	×	\	\	\	\	\
	Print	×	×	×	×	×	×	×	×	\	\	\	\	\
Manual Report Print	Setting	×	×	×	×	×	×	×	×	\	\	\	\	\
	Print	×	×	×	×	×	×	×	×	\	\	\	\	\

Note: ○: Available ×: Not available \: Not possible

Copyright 1997, Okidata, Division of OKI America, Inc. All rights reserved. See the OKIDATA Business Partner Exchange (BPX) for any updates to this material. (http://bpx.okidata.com)

Table 2.9.3 (6/6) Feature Specifications

Dual Access Combination Table (1/2)

Machine Status / Dual Access		Programming	TX from Feeder		Scanning to Memory		TX from Memory			RX (non-ECM/ECM)				
										Paper		Memory		
			During Scanning	After Scanning	During Refeeding	During Scanning	During Dialing	During Hand-shaking	During Trans-mitting Message	During Hand-shaking	During Receiving Message	During Hand-shaking (~1st ϕ C)	During Hand-shaking (~1st ϕ C)	During Receiving Message
Programming		\	×	×	×	×	×	×	×	×	×	×	×	×
TX from Feeder	Setting	×	\	○	\	\	○	○	○	○	○	○	○	○
	Dial & TX	×	\	\	\	\	\	\	\	\	\	\	\	\
Polling RX	Setting	×	×	×	×	×	×	×	×	×	×	×	×	×
	Dial & RX	×	\	\	×	×	\	\	\	\	\	\	\	\
Scanning to Memory		×	\	○	\	\	○	○	○	○	○	○	○	○
TX from Memory		×	\	\	×	×	\	\	\	\	\	\	\	\
Auto Answer	RX to Paper	×	\	\	×	×	\	\	\	\	\	\	\	\
	RX to Memory	×	\	\	×	×	\	\	\	\	\	\	\	\
	Poll TX	×	\	\	×	×	\	\	\	\	\	\	\	\
Manual Answer	RX to Paper	×	\	\	×	×	\	\	\	\	\	\	\	\
	RX to Memory	×	\	\	×	×	\	\	\	\	\	\	\	\
	Poll TX	×	\	\	×	×	\	\	\	\	\	\	\	\
Copy	Page by Page	×	\	×	\	\	×	×	×	×	×	×	×	×
Manual Message Print	Setting	×	×	×	×	×	×	×	×	\	\	\	\	\
	Print	×	×	×	×	×	×	×	×	\	\	\	\	\
Manual Report Print	Setting	×	×	×	×	×	×	×	×	\	\	\	\	\
	Print	×	×	×	×	×	×	×	×	\	\	\	\	\

Note: ○: Available ×: Not available \: Not possible

No.	Item	Specifications
20	Clock adjustment	Date and time adjustment

21	System data program	(a) Registration of TSI/CSI except for BEL, SUI and AUT (b) Registration of sender ID. (c) Registration of telephone number for the call-back message.
22	Programming password	To allow the operator (in this case, the person who wishes to as-sign a password to mail-box) to assign a 4-digit password code to one of 8 (OKIFAX 1050/2350) or 16 (OKIFAX 2450) mail-box memory segments in the message memory.

Copyright 1997, Okidata, Division of OKI America, Inc. All rights reserved. See the OKIDATA Business Partner Exchange (BPX) for any updates to this material. (http://bpx.okidata.com)

Users Initial Settings

One Touch Key Operations

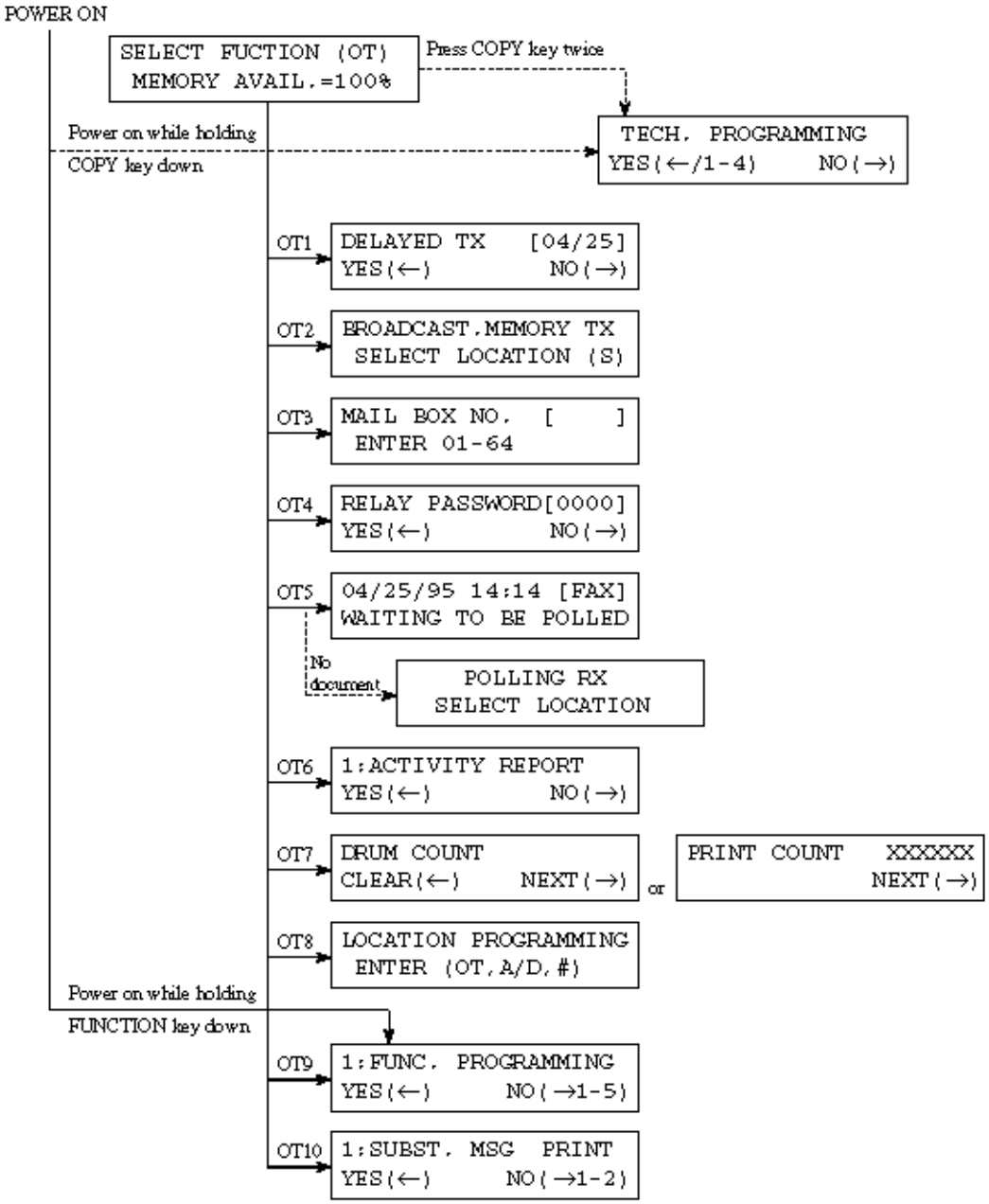

Copyright 1997, Okidata, Division of OKI America, Inc. All rights reserved. See the OKIDATA Business Partner Exchange (BPX) for any updates to this material. (http://bpx.okidata.com)

Table 2.9.4 (1/3) One-touch key Program Settings

F+OT No.	Item	Specifications
1	Delayed transmission (Tx)	This function enters a message transmission time(s) and location(s) for execution at a specified time.
2	Broadcast/memory transmission	To make a one-time selection of the memory transmis-sion mode. Max. 55 (OKIFAX 1050), Max. 84 (OKIFAX 2350) and Max. 134 (OKIFAX 2450) remote locations can be specified by the following means: One-touch key (with of without a group list) Two-digit auto dial code Keypad dial number When multiple locations are specified for one broad-cast, The fax can print a broadcast confirmation report, if specified in operating sequence.
3	Confidential transmission	To program the mail box number 01 to 64. Available remote station's mail box numbers: OKIFAX 2400/2600: 01 to 40 OKIFAX 1000: 01 to 16 OKIFAX 2300/900/1000: 01 to 16 OKIFAX 1050/OKIFAX 2350: 01 to 08 OKIFAX 2450: 01 to 16
4	Relay broadcast initiate transmission	This function automatically originates a message call via relay key station (which must be equipped with OKIFAX 2600) up to 99 locations. To program relay password. To enable or disable the relay report. Display when one location is programmed to auto dial No. 40 for OKIFAX 1050 or to auto dial No. 64 for OKIFAX 2350 or to auto dial No. 99 for OKIFAX 2450.

5	Polling transmission/reception	Polling TX: The documents placed on the feeder can be collected by a remote station. Polling RX: The fax can collect documents from one remote station.
6	Report printing	1. Activity report 2. Broadcast message confirmation report (Multi location) 3. Phone directory report 4. Configuration report 5. Protocol dump report * TF + 01 (Sets to on Service bit) 6. Log. report

Copyright 1997, Okidata, Division of OKI America, Inc. All rights reserved. See the OKIDATA Business Partner Exchange (BPX) for any updates to this material. (http://bpx.okidata.com)

Table 2.9.4 (2/3) One-touch key Program Settings

F+OT No.	Item	Specifications
7	Counter display (clear)	* TF + 01 (Sets to on Service bit) The operation for displaying and clearing the print counters in five ways are as follows: 1. Drum counter * Drum counter indicates only when reaching a life of a drum. 2. Toner counter * TF + 01 (Sets to on Service bit) 3. Drum (total) continue * TF + 01 (Sets to on Service bit) 4. Print counter * User can read no. of counter in LCD but can not clear. 5. Scan counter * User can read no. of counter in LCD but can not clear.
8	Location program 1. One-touch key	One-touch keys allow registering: (1) Telephone number (numeral, -, P and space) in 32 digits. (2) Alternate fax telephone number in 32 digits. (additional registration) (3) ID for the telephone directory function in 15 characters (alphabetic, numeric and symbolic). (One ID can be registered for one key). (4) 10 one-touch keys are provided (OKIFAX 1050). 15 one-touch keys are provided (OKIFAX 2350). 30 one-touch keys are provided (OKIFAX 2450).
	2. Two-digit auto dial program	Auto-dial No. 01 to 40 for OKIFAX 1050, No. 01 to 64 for OKIFAX 2350 and No. 01 to 99 for OKIFAX 2450 allows registering telephone number in 32 dig-its (numeral, -, P and space) and ID for the telephone directory function 15 characters (alphabetic, numeric and symbolic).
	3. Group setting	Grouping some one-touch keys and some two-digit auto dial codes to which telephone numbers have been assigned. This group setting makes broadcast operation simple. Five dialing groups for OKIFAX 1050, 10 dialing groups for OKIFAX 2350 and 20 dialing groups for OKIFAX 2450.

Copyright 1997, Okidata, Division of OKI America, Inc. All rights reserved. See the OKIDATA Business Partner Exchange (BPX) for any updates to this material. (http://bpx.okidata.com)

Table 2.9.4 (3/3) One-touch key Program Settings

F+OT No.	Item	Specifications

9	User's programs 1. Function program	Function program 01: MCF (SINGLE-LOC.) 02: MCF (MULTI-LOC.) 03: SENDER ID 04: MONITOR VOLUME 05: REMOTE DIAGNOSIS 06: CLOSED NETWORK 07: TX MODE DEFAULT 08: T/F TIMER PRG. 09: BUZZER VOLUME 10: 1'ST PAPER SIZE 11: 2'ND PAPER SIZE 12: SELECT LANGUAGE 13: SOFT RINGER SET 14: REMOTE RECEIVE (1050/2350 only) 15: RING RESPONSE 16: MEM/FEEDER SW 17: ONE TOUCH PARAM. Refer to Table 2.9.4 Function Program for Specification of the function programs No. 01 through 17.
	2. Dial parameters	Dial parameters 1. NATIONAL CODE 2. REDIAL TRIES 3. REDIAL INTERVAL 4. DIAL TONE DETECT 5. BUSY TONE DETECT 6. MF (TONE)/DP (PULSE) 7. PULSE DIAL RATE 8. PULSE MAKE RATIO 9. PULSE DIAL TYPE 10. MF(TONE) DURATION 11. PBX LINE 12. FLASH/EARTH/NORMAL 13. AUTO START 14. ACCESS DIGIT Refer to Table 2.9.5.03 for specification of dial parameter settings.
	3. Clock adjustment	Date and time adjustment.
	4. System data program	(1) TSI/CSI Registration of TSI/CSI/CIG (numbers, + and space) in 20 digits. TSI:Transmitting Subscriber Identification CSI: Called Subscriber Identification CIG: Calling Subscriber Identification (2) SENDER ID Registration of sender ID (alphabetic, numeric and symbolic) in 32 digits. (3) CALL BACK NO. Registration of telephone number for cover let-ter (alphabetic, numeric and symbolic) in 20 digits.
	5. Password program	To allow the operator (in this case, a person who wishes to assign a password to mail box) to assign a 4-digit password code to one of 8 for OKIFAX 1050, 8 for OKIFAX 2350 and 16 for OKIFAX 2450 mail-box memory segments in the message memory.

	3. Password Program	To allow the operator (in this case, a person who wishes to assign a password to mail box) to assign a 4-digit password code to one of 8 for OKIFAX 1050, 8 for OKIFAX 2350 and 16 for OKIFAX 2450 mail-box memory segments in the message memory.

Copyright 1997, Okidata, Division of OKI America, Inc. All rights reserved. See the OKIDATA Business Partner Exchange (BPX) for any updates to this material. (http://bpx.okidata.com)

Table 2.9.4 User Function Program Settings

Function Program

F+OT No.	Item	Specifications	Default
01	Message confirmation report (Single location)	Enables or disables the automatic message confirmation report printing after a single location call. ON: Prints the MCF report. OFF: Disables this function.	OFF
02	Message confirmation report (Multiple locations)	Enables of disables the automatic message confirmation report printing after a multiple polling or broadcast. ON: Prints the MCF report. OFF: Disables this function.	ON
03	Sender ID	The fax can transmit programmed alphanumeric message, such as company's name consisting of up to 32 characters. Enables or disables the sender ID function. * (Outside only) ***Note:*** The user programming of this information is an FCC requirement. ON: Enable OFF: Disables	ON
04	Line monitor volume	Controls the volume of the phone line monitor. OFF/Low/High selectable.	LOW

05	Remote diagnosis	Enables or disables the remote diagnosis function. The machine can allow remote diagnosis from a service center that is capable. ON: Enables OFF: Disables	OFF
06	Closed network	The fax compares the last four digits of TSI/CSI received from remote station with fax numbers registered locally for one-touch dial and two-digits autodial. If unmatched, the communication will be automatically disconnected. OFF/RX only/TX and RX selectable. * Prevention of direct mail or wrong number calls. (Reference) TSI: Transmitting subscriber identification CSI: Called subscriber identification	OFF
07	TX mode default	Selects automatically the mode set up when a 07 TX mode default docu-ment is loaded on the feeder. The following combinations are selectable. STD/NORMAL→STD/DARK→STD/LIGHT→ FINE/NORMAL→FINE/DARK→FINE/LIGHT→ EX.FINE/NORMAL→EX.FINE/DARK→ EX.FINE/LIGHT→PHOTO/NORMAL→ PHOTO/DARK→PHOTO/LIGHT→ STD/NORMAL→...	STD/ NORMAL and Non-Photo
08	Telephone/fax automatic switchover time	Specifies the time for which the fax alerts an operator on reception of a call in the telephone/fax automatic switchover mode. 20 sec./35 sec. selectable Refer to TEL/FAX and TAD receive mode options	35 sec.
09	Buzzer volume	Selects the sound volume of each of the key touchtone, end of communication buzzer, voice request buzzer and off-hook alarm from high, low and middle levels.	MID.

10	1'st cassette paper size	Selects A4, LETTER or LEGAL for this function. The operator must select the preferable paper size as the machine cannot detect the paper size automatically.	LETTER
11	2'nd cassette paper size (option)	Selects A4, LETTER or LEGAL for this function. The operator must select the preferable paper size as the machine cannot detect the paper size automatically. (for OKIFAX 2350/2450)	LETTER
12	Select language	A choice of 2 languages for LCD and print message are available. ENGLISH and one other language	ENGLI
13	Software ringer set	Instead of a ringer circuit, software controls the audible indication of an incoming call through the built in speaker. To enable (ON) or disable (OFF) a software generated ring sound to indicate arrival of an incoming call.	ON OFF
14	Remote receive (except OKIFAX 2450)	This function is used to transfer the call received by external telephone (connected to fax) by entering preset two-digits. (for OKIFAX 1050/2350 only) The following combinations are selectable. OFF-->11-->22-->33-->44 -->55-->66-->77-->88-->99 Selects the ring response time.	
15	Ring response time	1 ring/5/10/15/20 sec.	1 ring
16	Memory and feeder selection	Switches the transmission mode between the memory and feeder. MEM. TX/FEEDER TX • Defaults: OKIFAX 1050/2350 FEEDER TX OKIFAX 2450 MEM. TX	
17	One-touch key parameters	To assign the following features to each one-touch key. 1) Echo protection (ON/OFF)	OFF

Copyright 1997, Okidata, Division of OKI America, Inc. All rights reserved. See the OKIDATA Business Partner Exchange (BPX) for any updates to this material. (http://bpx.okidata.com)

2.9.5 User's Functions Example

2.9.5.01 Function Program

Operations:
To bring the LCD up to the desired message, press SELECT FUNCTION key once and one-touch key No. 9 in the standby mode. (In case of no message in memory)

Press the ← key.
Enter two-digit function number, then the display will show the set item corresponding to the number entered. If you want to set up all or several items starting with 01, then enter 01

The display shows:

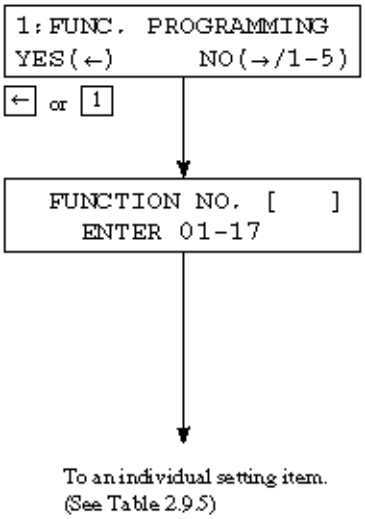

Copyright 1997, Okidata, Division of OKI America, Inc. All rights reserved. See the OKIDATA Business Partner Exchange (BPX) for any updates to this material. (http://bpx.okidata.com)

Table 2.9.5 User's Functions

Tap No.	Name of Function	The Display Shows
0 1	Message confirmation report (Single location)	01:MCF(SINGLE-LOC.) [X] YES(←) NO(→) → Setting (Toggle) X: OFF ⇆ ON
0 2	Message confirmation report (Multiple locations)	02:MCF (MULTI-LOC.) [X] YES(←) NO(→) → Setting (Toggle) X: OFF ⇆ ON
0 3	Sender ID	03:SENDER ID [X] YES(←) NO(→) → Setting (Toggle) X: OFF ⇆ ON
0 4	Line monitor volume	04:MONITOR VOLUME [X] YES(←) NO(→) → Setting X: OFF → LOW → HIGH
0 5	Remote diagnosis	05:REMOTE DIAG. [X] YES(←) NO(→) → Setting (Toggle) X: OFF ⇆ ON
0 6	Closed network	06:CLOSED NETWORK [X] YES(←) NO(→) → Setting X: T/R → RX → OFF
0 7	TX mode default	07:TX MODE DEFAULT YES(←) NO(→) → Setting RESOLUTION & ORIGINAL NOTE1:
0 8	Telephone/fax automatic switchover timer	08:T/F TIMER PROG. [X] YES(←) NO(→) → Setting (Toggle) X: 20SEC ⇆ 35SEC

0 9	Buzzer volume	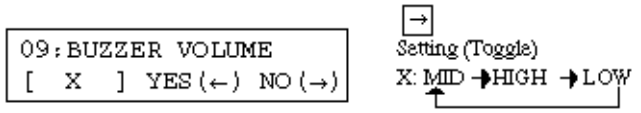
1 0	1'st cassette paper size	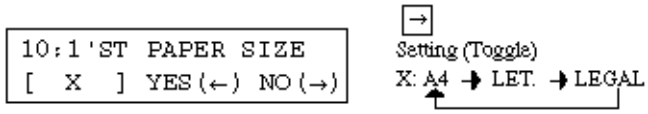
1 1	2'nd cassette paper size	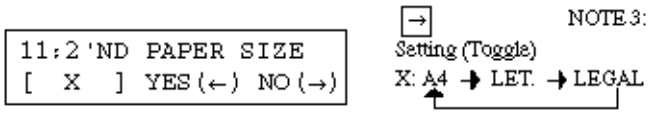
1 2	Select language	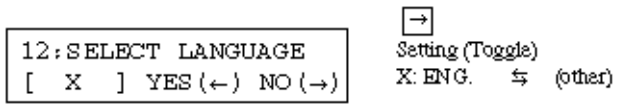
1 3	Software ringer set	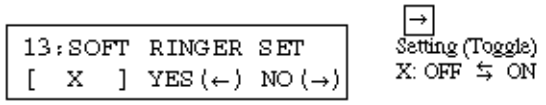
1 4	Remote receive	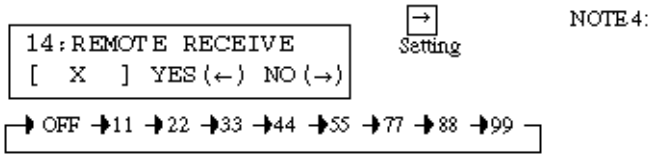
1 5	Ring response time	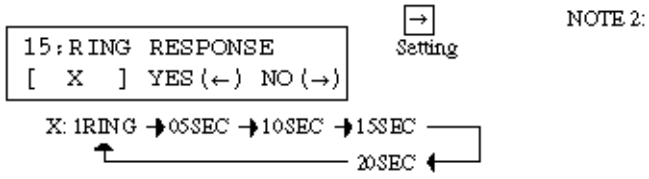
1 6	Memory and feeder selection	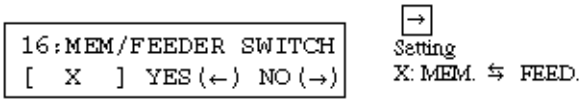

1 7	One-touch key parameters	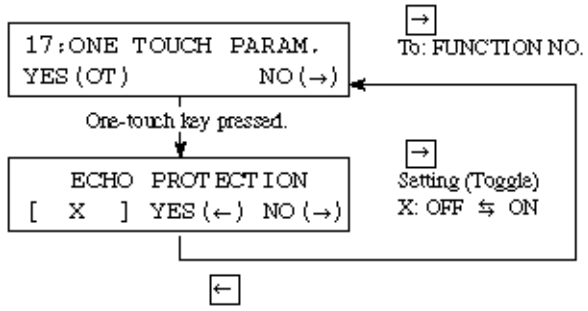

Note1: RESOLUTION & ORIGINAL of Tx mode default setting can be selected by using → key.

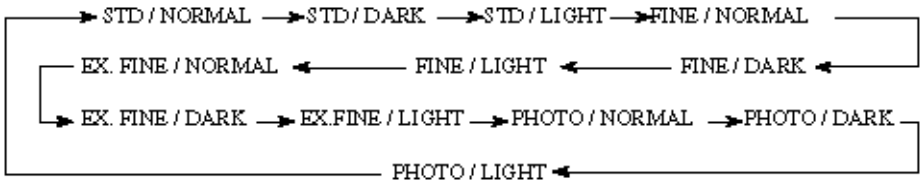

Note2: When the service bit is set to "off" and the correspond bit of XPARA of national code is set to "off", Ring response is bypassed as follows:

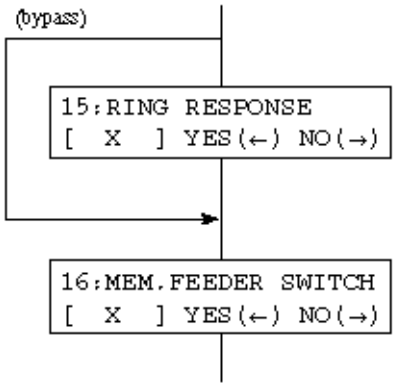

Note3: When 2'nd tray is not mounted on OKIFAX 1050/2350/2450, 2'nd paper size is bypassed as follows:

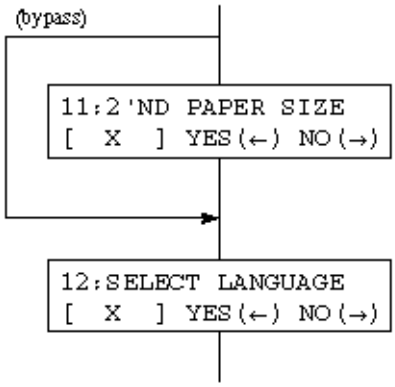

Note2: For OKIFAX 2450, Remote Receive is bypassed as follows:

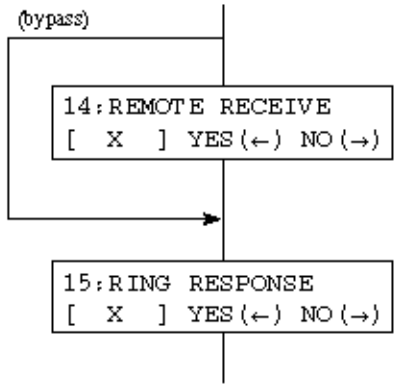

Copyright 1997, Okidata, Division of OKI America, Inc. All rights reserved. See the OKIDATA Business Partner Exchange (BPX) for any updates to this material. (http://bpx.okidata.com)

2.9.5.02 Ring response time

Before specifying the ring response time, set the service bit on following the operations shown in **Section 2.9.3.01 (Service Bit Setting).**

Operations:

- To bring the LCD up to the desired message, press SELECT FUNCTION key once and one-touch key No. 9 in the standby mode. (In case of no message in memory)
- Press the ← key enter using the ten-key pad.
- Enter 15 using the ten-key pad.
- Press the → key until the setting you want is displayed, then press the ← key.

The display shows:

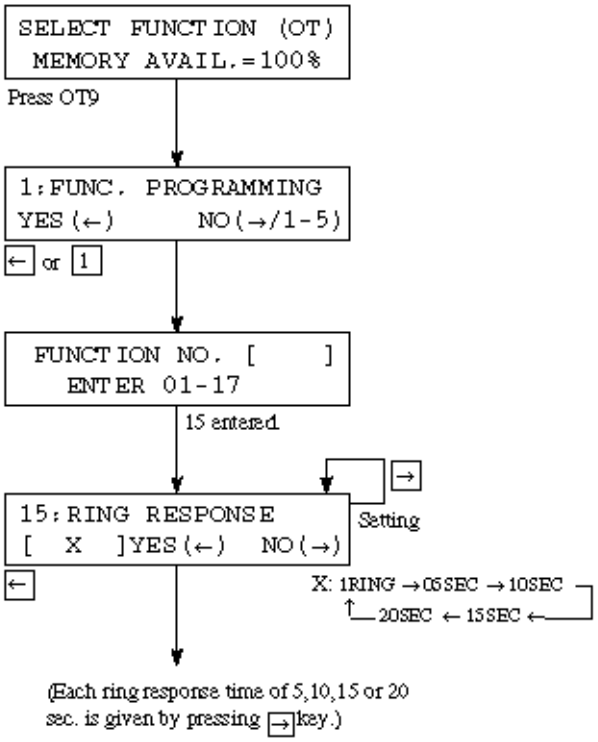

Copyright 1997, Okidata, Division of OKI America, Inc. All rights reserved. See the OKIDATA Business Partner Exchange (BPX) for any updates to this material. (http://bpx.okidata.com)

2.9.5.03 Dial parameters (In case the service bit is "OFF".)

To get the "DIAL PARAMETER" message on the display, perform the same operation as listed **in Section 2.9.12. (Dial parameters settings).**

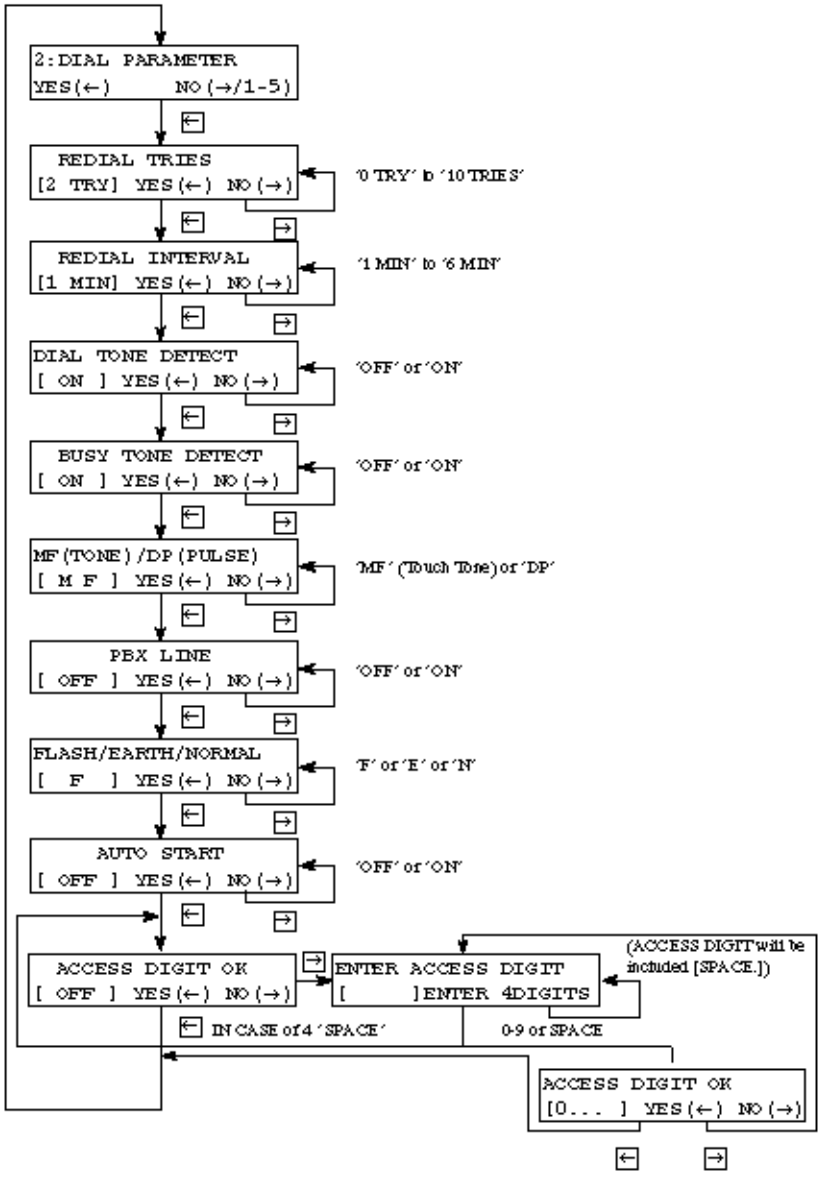

Copyright 1997, Okidata, Division of OKI America, Inc. All rights reserved. See the OKIDATA Business Partner Exchange (BPX) for any updates to this material. (http://bpx.okidata.com)

2.9.6 Clock Adjustment

Operations:

- To set the date and time, press the SELECT FUNCTION key once and one-touch key No. 9 in the standby mode. (If no message is in memory)
- Enter 3 using the ten-key pad.
- Press the ← key.
- Enter date and time by using the ten-key pad (0 to 9 keys).

The display shows:

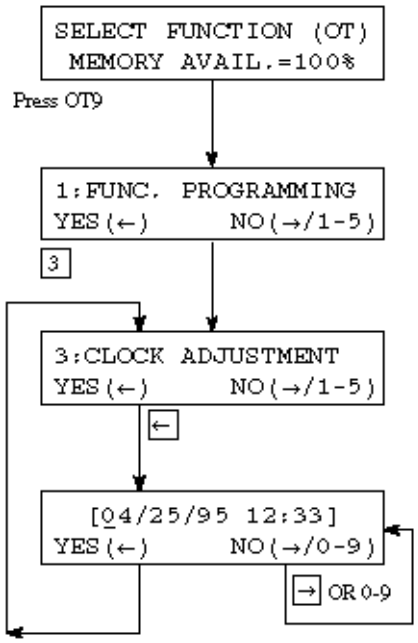

Copyright 1997, Okidata, Division of OKI America, Inc. All rights reserved. See the OKIDATA Business Partner Exchange (BPX) for any updates to this material. (http://bpx.okidata.com)

2.9.7 Dual Access Operation (for OKIFAX 2350/2450)

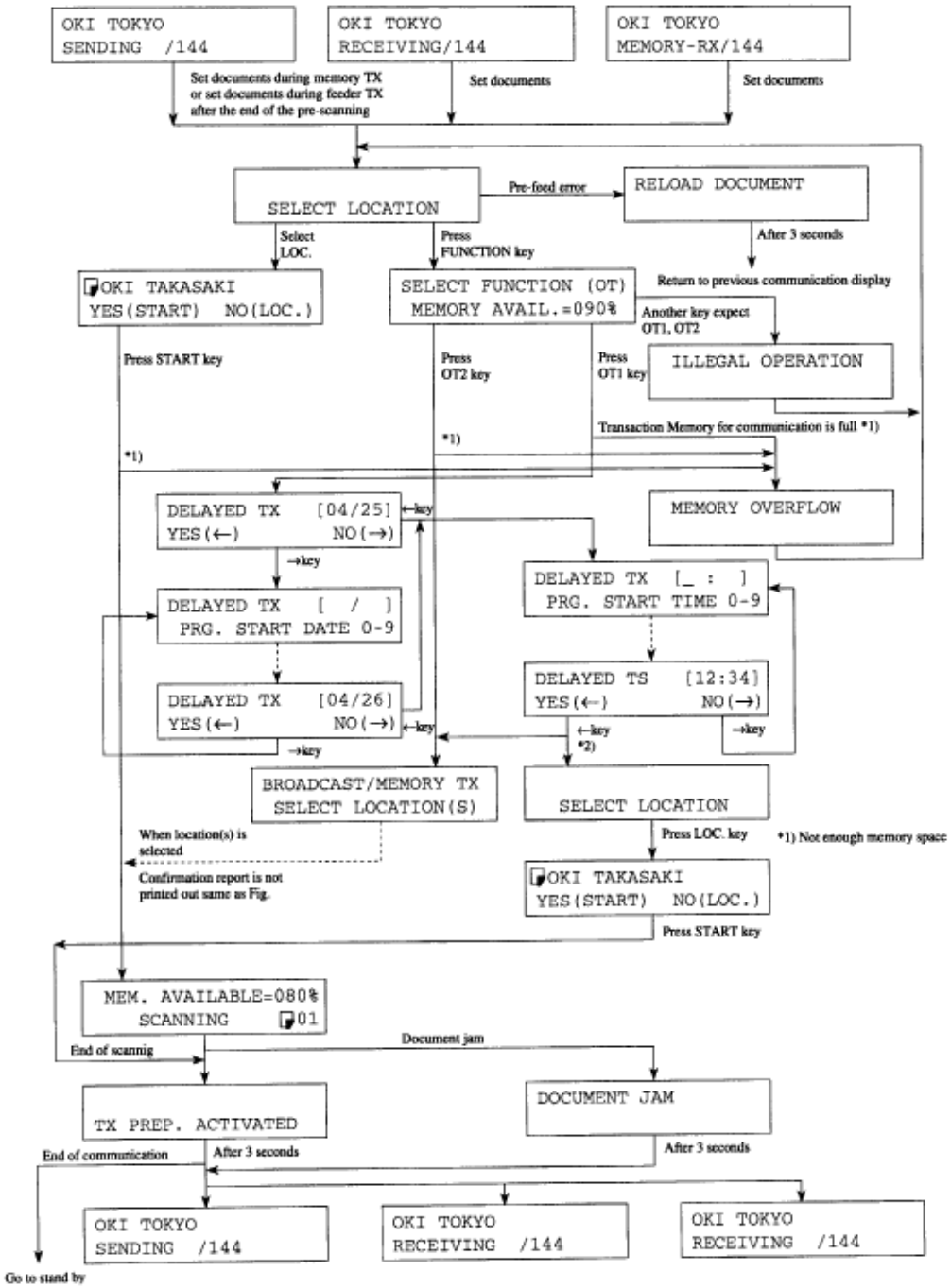

Copyright 1997, Okidata, Division of OKI America, Inc. All rights reserved. See the OKIDATA Business Partner Exchange (BPX) for any updates to this material. (http://bpx.okidata.com)

2.9.8 System Data Programming

TSI/CSI (Default: Blank)
Registration of sender ID (Default: Blank)
Registration of telephone number for the call-back message (Default: Blank)

Operations:

- To program system ID data, press the SELECT FUNCTION key once and one-touch key No. 9 in the standby mode.
  (If no message is in memory)
- Enter 4 using the ten-key pad.
- Press the ↵ key.

The display shows:

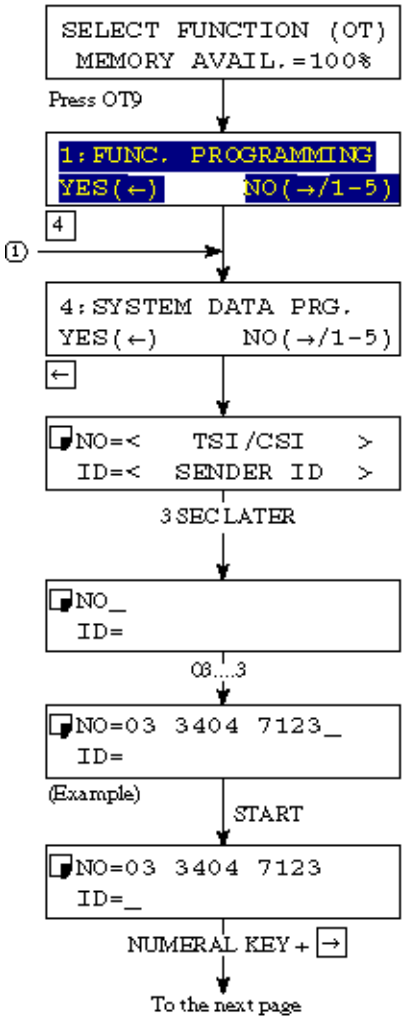

Note: Use the UNIQUE key to input special symbols.

Operations:

- Press the START key.
- Press the START key.

The display shows:

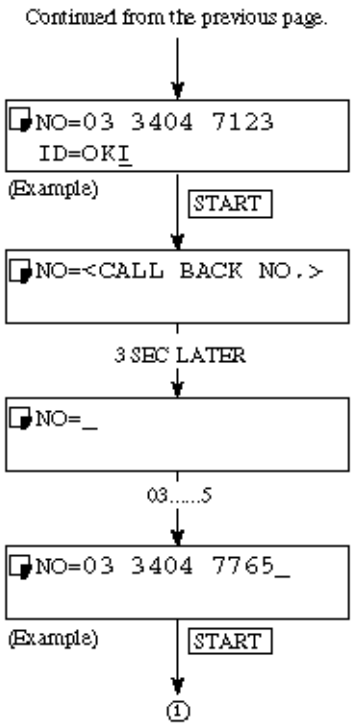

Copyright 1997, Okidata, Division of OKI America, Inc. All rights reserved. See the OKIDATA Business Partner Exchange (BPX) for any updates to this material. (http://bpx.okidata.com)

2.9.9 One-Touch Key Programming

2.9.9.01 Purpose

One-touch keys No. 01 through 10 (OKIFAX 1050), No. 01 through 15 (OKIFAX 2350) or No. 01 through 30 (OKIFAX 2450) allow registration: (Default: Blank)

Telephone number (numeral, -, P (Dial Pause), and space) in 32 digits. Alternate telephone number in 32 digits (additional registration) ID for the telephone directory function in 15 characters (alphabets, numeral, and symbols)

2.9.9.02 Procedure

Operations:

- To program one-touch keys, press the SELECT FUNCTION key once and one-touch key No. 8 in the standby mode. (If no message is in memory)
- Enter one-touch key No. 1 (Example).

The display shows:

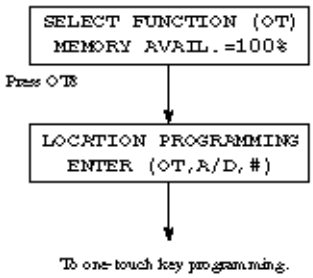

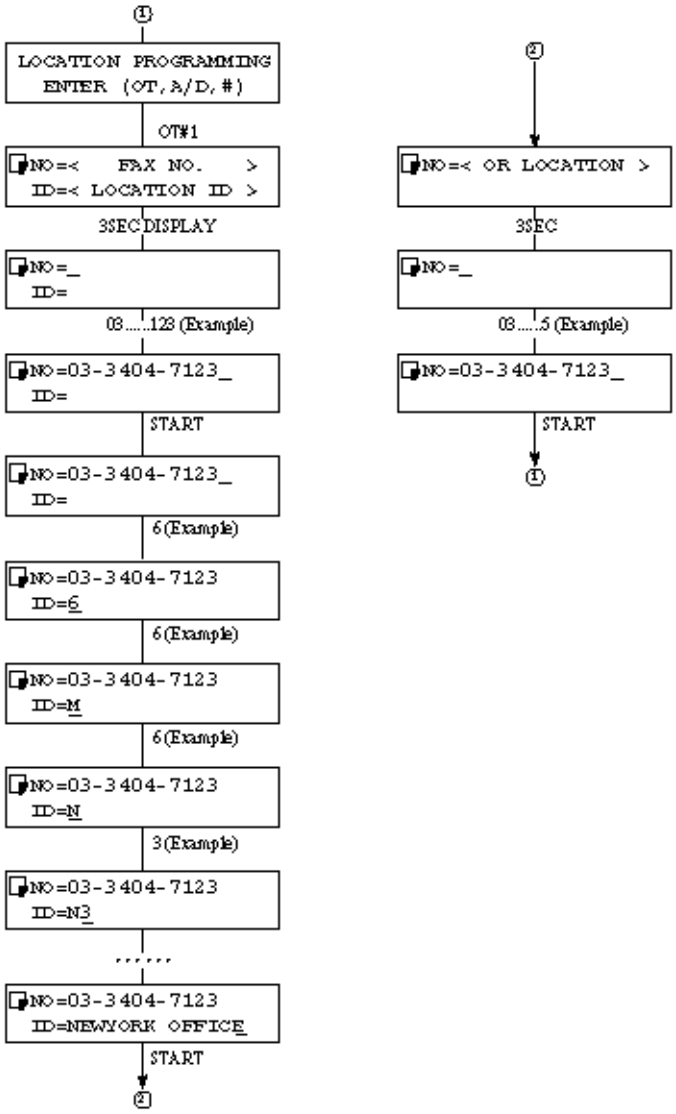

Copyright 1997, Okidata, Division of OKI America, Inc. All rights reserved. See the OKIDATA Business Partner Exchange (BPX) for any updates to this material. (http://bpx.okidata.com)

2.9.10 Two-digit Auto Dial Programming

2.9.10.01 Purpose

Auto dial No. 01 through 40 (OKIFAX 1050), No. 01 through 64 (OKIFAX 2350) or No. 01 through 99 (OKIFAX 2450) allow registering a telephone number in 32 digits (numeral, -, P (Dial Pause), and space) and ID for the telephone directory function in 15 characters (alphabets, numeral, and symbols). (Default: Blank)

2.9.10.02 Procedure

Operations:

- To program auto dial locations, press the SELECT FUNCTION key once and one-touch key No. 8 in the standby mode. (If no message is in memory)
- Enter the AUTO DIAL key.

The display shows:

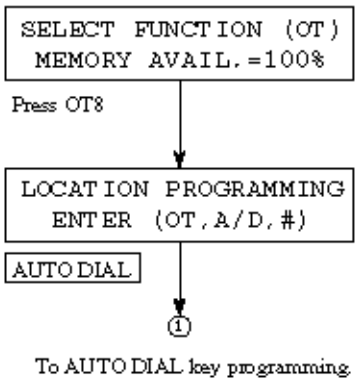

Operations: **The display shows:**

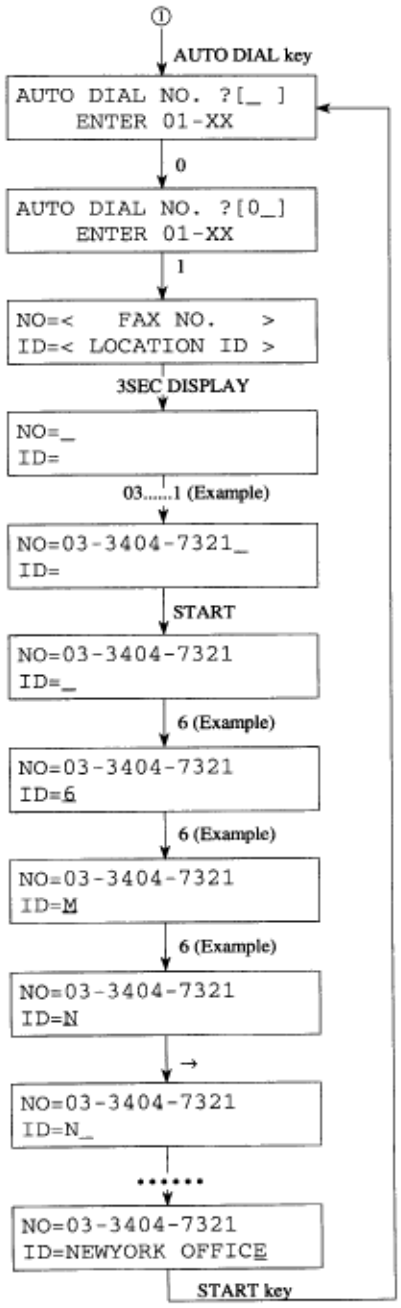

Note;

XX: Location No. 01 to No. 40 for OKIFAX 1050.
Location No. 01 to No. 64 for OKIFAX 2350.
Location No. 01 to No. 99 for OKIFAX 2450.

Copyright 1997, Okidata, Division of OKI America, Inc. All rights reserved. See the OKIDATA Business Partner Exchange (BPX) for any updates to this material. (http://bpx.okidata.com)

2.9.11 Group setting

Grouping some one-touch keys and some two-digit auto dial codes to which telephone numbers have been assigned. This group setting makes multiple polling reception and broadcast operation simple.

OKIFAX 1050: 5 dialing groups
OKIFAX 2350: 10 dialing groups
OKIFAX 2450: 20 dialing groups

Operations:

- To program a group of numbers, press the SELECT FUNCTION key once and one-touch key No. 8 in the standby mode. (If no message is in memory)
- Enter # using the ten-key pad.
- Enter 2 digits using the ten-key pad.

The display shows:

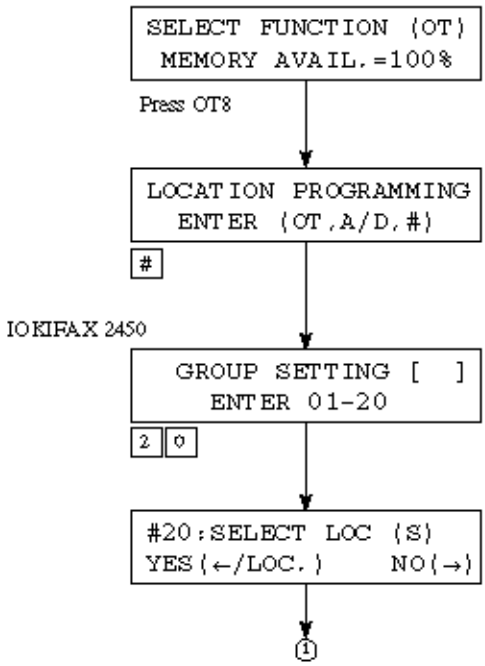

Case 1: Making a group

- Press a one-touch key or Auto Dial key followed by the two digit code which you want to put into the group.
- Press the [←] key to register the location or the [→] key to cancel it.
- Repeat the above operation until all locations you want are registered.
- To save the group, press the [→] key.

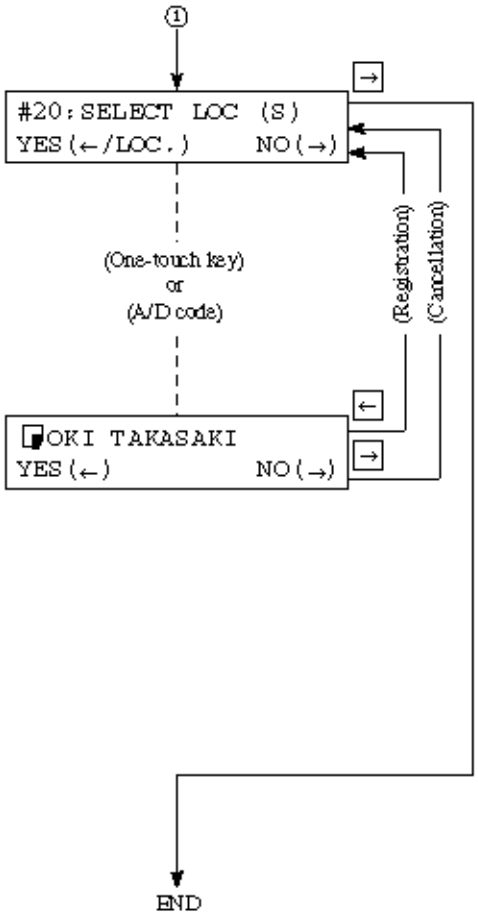

Case 2: Canceling member(s) from a group

- Press the ← key.
- Press the ← key to keep the location in the group or the → key to cancel it.
- Repeat the above operation until all members you want to cancel are displayed.
- To save the group, press the → key.

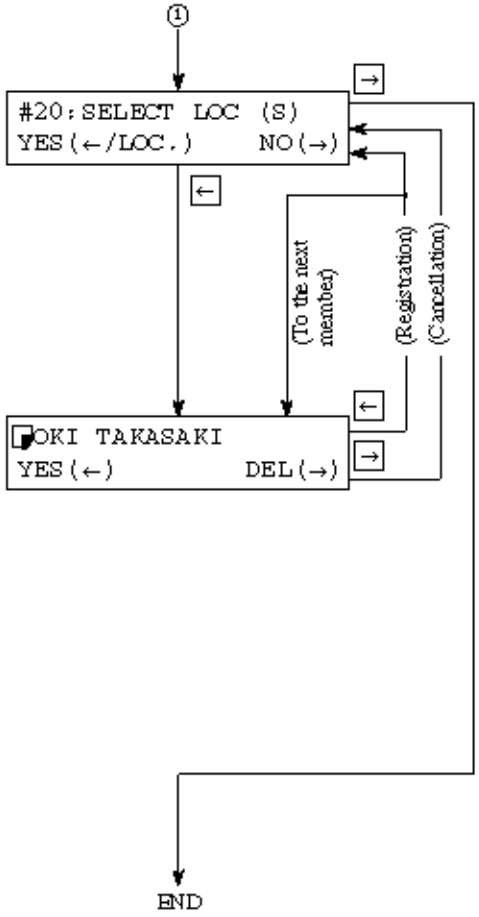

Copyright 1997, Okidata, Division of OKI America, Inc. All rights reserved. See the OKIDATA Business Partner Exchange (BPX) for any updates to this material. (http://bpx.okidata.com)

2.9.12 Dial Parameters Settings

2.9.12.01 Procedure

The following shows the case in which the service bit is on.

Operations:

- To bring the LCD up to the desired message, press the SELECT FUNCTION key once and one-touch key No. 9 in the standby mode. (If no message is in memory)
- Enter 2 using the ten-key pad.
- Press the ← key.

The display shows:

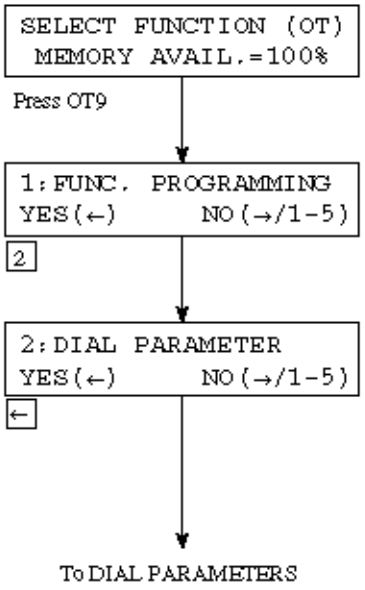

The display shows:

Continued from the previous page.

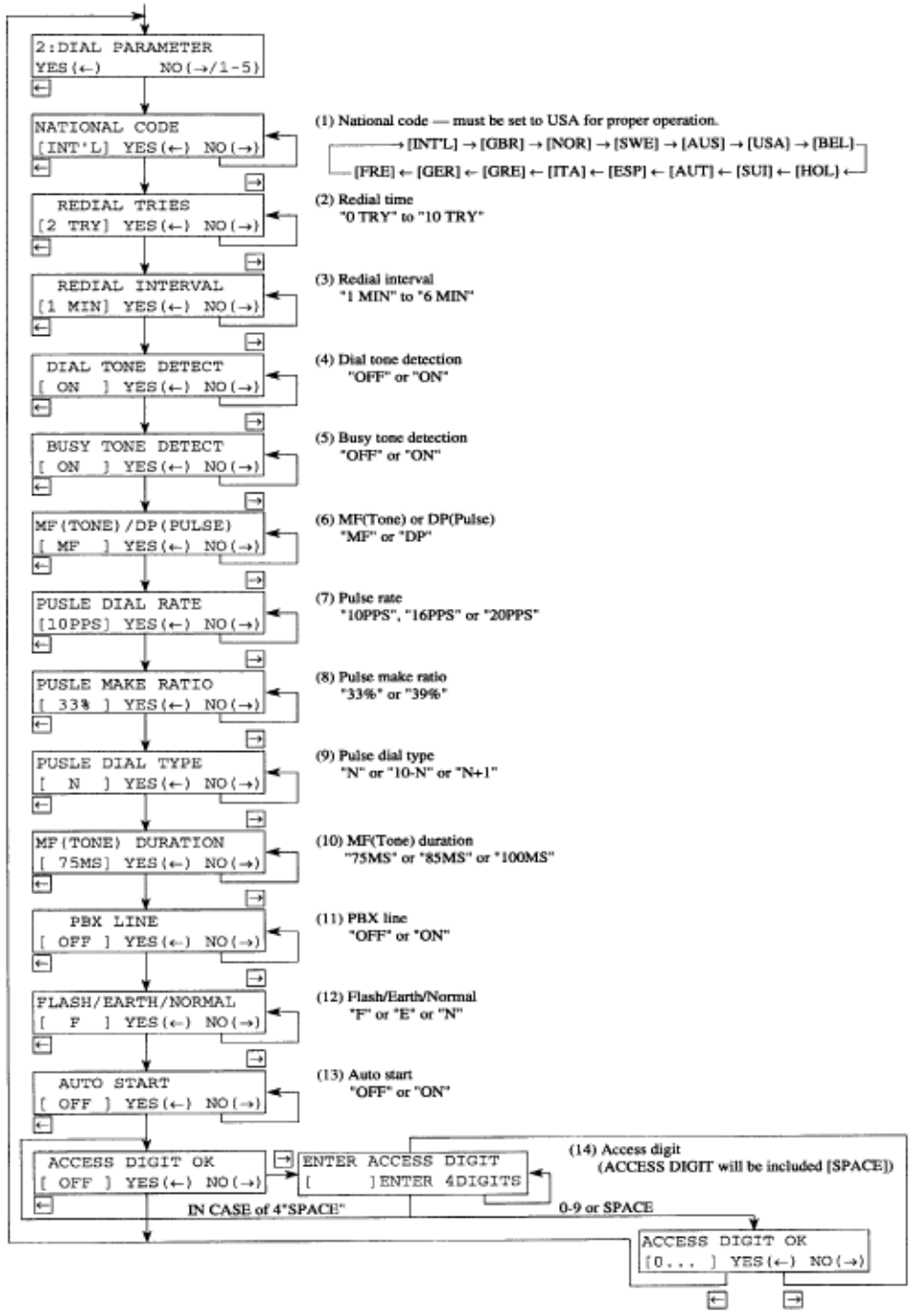

Copyright 1997, Okidata, Division of OKI America, Inc. All rights reserved. See the OKIDATA Business Partner Exchange (BPX) for any updates to this material. (http://bpx.okidata.com)

2.9.12.02 Procedure

No.	PTT Parameter Items	Setting Selection	1 ODA	2 ATT	3 E-INT	4 E-GER	5 E-ITA	6 E-FRA	7 O-INT	8 L-AB	9 L-FTZ	10 L-ITA	11 L-AG	12 Reserved	(13) Factory
1	NATIONAL CODE	INT'L GBR NOR SWE AUS USA BEL HOL SUI AUT ESP ITA GRE GER FRE	USA	USA	GBR	GER	GBR	FRE	AUS	GBR	GER	GBR	USA	USA	INT'L
2	REDIAL TRIES	0 - 10 TRIES	3	5	2	10	2	5	2	2	10	2	3	3	2
3	REDIAL INTERVAL	1 - 6 *min.*	3	3	3	1	3	6	3	3	1	3	3	3	3
4	DIAL TONE DETECT	ON / OFF	OFF	ON	ON	ON	ON	ON	ON	ON	ON	ON	OFF	OFF	ON
5	BUSY TONE DETECT	ON / OFF	ON	ON	ON	ON	ON	ON	ON	ON	ON	ON	ON	ON	OFF
6	MF/DP	DP / MF	MF	MF	MF	DP	MF	MF	MF	MF	DP	MF	MF	DP	MF
7	PULSE RATE	10 PPS / 16 PPS / 20 PPS	10	10	10	10	10	10	10	10	10	10	10	20	10
8	PULSE MAKE RATIO	33 % / 39 %	39%	39%	33%	39%	33%	33%	39%	39%	39%	33%	39%	33%	39%
9	PULSE DIAL TYPE	N / 10 - N / N + 1	N	N	N	N	N	N	N	N	N	N	N	N	N
10	MF DURATION	75 *ms* / 85 *ms* / 100 *ms*	100	100	85	85	85	75	85	85	85	85	100	100	100
11	PBX LINE	ON / OFF	OFF	OFF	OFF	OFF	OFF	OFF	OFF	OFF	OFF	OFF	OFF	OFF	ON
12	PBX TYPE	NORMAL / FLASH / EARTH	N	N	N	EARTH	N	FLASH	N	N	EARTH	N	N	N	N
13	AUTO START	ON / OFF	ON	ON	OFF	ON	OFF	OFF	ON	OFF	ON	OFF	ON	ON	ON
14	ACCESS DIGIT	OFF / (max. 4 digits)	OFF	OFF	OFF	0...	OFF	OFF	OFF	OFF	0...	OFF	OFF	OFF	OFF

Table 2.9.11 Default Settings of Dial Parameters

Copyright 1997, Okidata, Division of OKI America, Inc. All rights reserved. See the OKIDATA Business Partner Exchange (BPX) for any updates to this material. (http://bpx.okidata.com)

Table 2.9.6 Dial Parameters Settings

No.	Item	Specifications
01	National code	Selecting the following parameters: INT'L, GRB, NOR, SWE, AUS, USA, BEL, HOL, SUI, AUT, ESP, ITA, GRE, GER, FRE Note: Must be set to USA for proper machine operation.
02	Redial tries	0 to 10 tries.
03	Redial interval	1 to 6 minutes (one-minute steps)
04	Dial tone detect	Selects the dial tone detection. ON/OFF selectable. ON: Enable OFF: Disable
05	Busy tone detect	Selects the busy tone detection. ON/OFF selectable. ON: Enable OFF: Disable
06	MF (TONE) or DP (Pulse)	Selects dialing by multi-frequency or dial pulse.
07	Pulse dial rate	Selects the dialing pulse rates for the line. 10 pps/16 pps/20 pps selectable.
08	Pulse make ratio	Selects pulse dial rate. 33%/39%
09	Pulse dial type	Selects pulse dial type. Normal(N)/10-N/N+1
10	MF (Tone) duration	Selects MF (Tone) duration. 75/85/100 ms selectable.
11	PBX line	Selects PBX line. ON/OFF selectable.

12	Flash/Earth/Normal	Selects the PBX type to meet the exchange requirements. NORMAL/EARTH/FLASH selectable. (PBX line origination types)
13	Auto start	Enables or disables the function of dialing without pressing the START key in one-touch dial and 2-digit auto dial modes. ON: Enable OFF: Disable
14	Access digit	Prefix dialing digits with which PBX Connects the fax to the public line. OFF/digit(s) selectable. Note: When a preprogrammed access digit is recognized in the dialing sequence, the machine will automatically insert a pause. (The access code is not dialed automatically.)

Copyright 1997, Okidata, Division of OKI America, Inc. All rights reserved. See the OKIDATA Business Partner Exchange (BPX) for any updates to this material. (http://bpx.okidata.com)

2.9.13 Programming Mail Box Password

To allow the operator (in this case, a person who wishes to assign a password to mail-box) to assign a 4-digit password to one of 8 for OKIFAX 1050, 8 for OKIFAX 2350, 16 for OKIFAX 2450 mail-box memory segments in the message memory.

Operations:

- To program a mailbox password, press the SELECT FUNCTION key once and one-touch key No. 9 in the standby mode. (If no message is in memory)
- Enter 5 using the ten-key pad.
- Press the [←] key. In case of OKIFAX 2450
- Enter 2 digits (16) using the ten-key pad.
- Enter 4 digits using the ten-key pad.

The display shows:

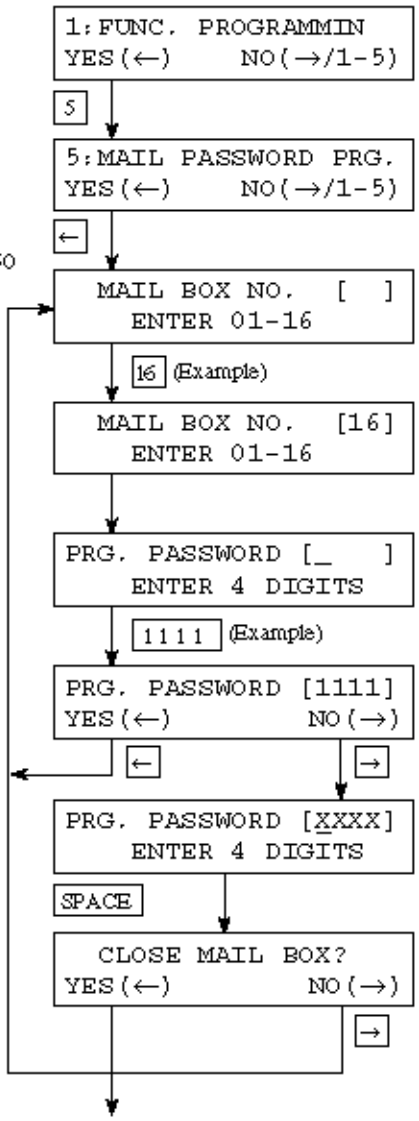

Copyright 1997, Okidata, Division of OKI America, Inc. All rights reserved. See the OKIDATA Business

Partner Exchange (BPX) for any updates to this material. (http://bpx.okidata.com)

2.9.14 Memory Operations

2.9.14.01 SUBST. MSG PRINT

This function will force printing of messages received into memory due to a low toner condition.
Note: Print quality may be poor under these circumstances.

Operations:

- To use the substitute MSG.Print function, press the SELECT FUNCTION key once and one-touch key No. 10 in the standby mode.
  (If no message is in memory)
- Press the ← key.

The display shows:

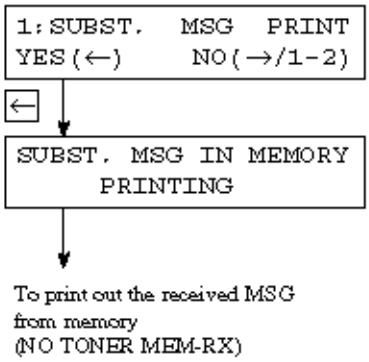

To print out the received MSG from memory
(NO TONER MEM-RX)

Copyright 1997, Okidata, Division of OKI America, Inc. All rights reserved. See the OKIDATA Business Partner Exchange (BPX) for any updates to this material. (http://bpx.okidata.com)

2.9.14.02 CONF. RX MSG. PRINT

Messages received in a personal box can be printed out only if the password entered by the operator matches that registered for the box.

Operations:

- To print a confidential message from a mailbox, press the SELECT FUNCTION key once and one-touch key No. 10 in the standby mode. (If no message is in memory)
- Enter 6 using the ten-key pad, and then press the [←] key.
- Enter 2 digits (08) using the ten-key pad.
  OKIFAX 1050/2350: 1–8
  OKIFAX 2450 : 01–16
- Enter 4 digits using the ten-key pad.
- Press the [←] key.

The display shows:

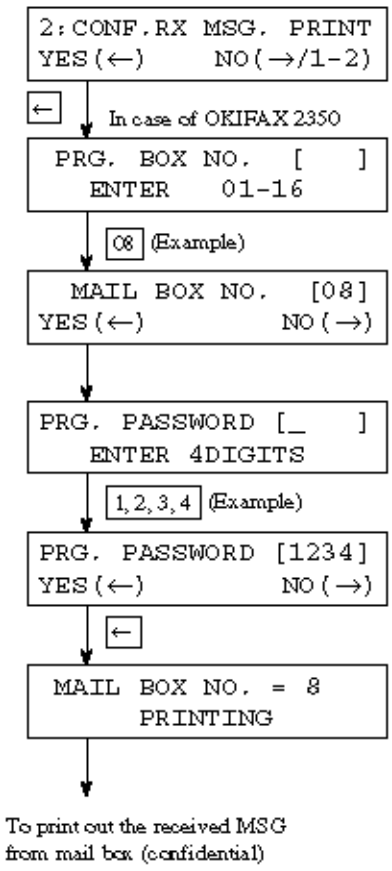

To print out the received MSG from mail box (confidential)

Copyright 1997, Okidata, Division of OKI America, Inc. All rights reserved. See the OKIDATA Business Partner Exchange (BPX) for any updates to this material. (http://bpx.okidata.com)

2.9.15 Off-line Tests

2.9.15.01 Purpose

Activate self-diagnosis which includes: Print test CPU-ROM version printing CPU-RAM check FLASH version printing LANGUAGE version printing DEFAULT version printing RAM check RAM check (memory board: optional) PC-I/F version printing (optional)

2.9.15.02 Procedure

Operations:

- To perform offline testing, press the SELECT FUNCTION key once and the COPY key twice in the standby mode. (If no message is in memory)
- Press the ← key.
- Press the ← key.
- Press the ← key for checking and test printing. (An example of printed data is shown in Figure 2.9.4)

The display shows:

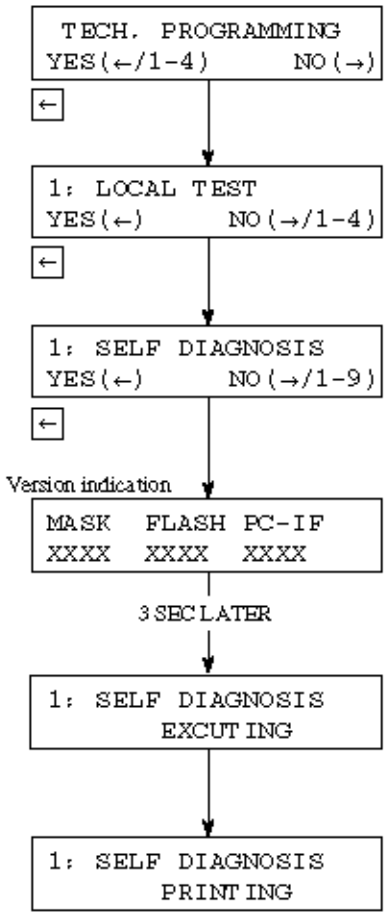

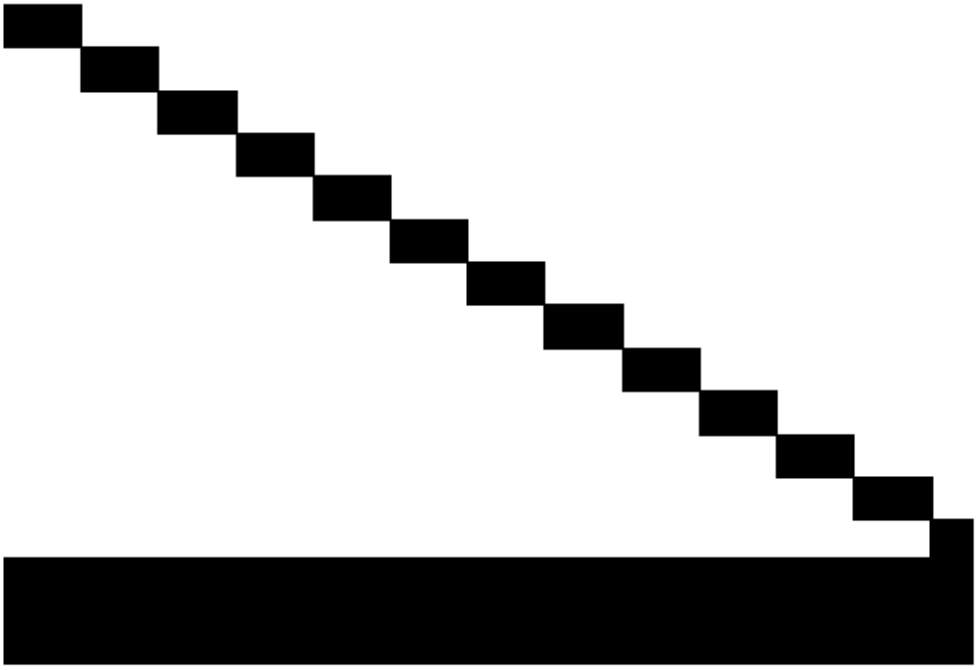

```
CPU-ROM   VERSION  Z106
          HASH     OK     9CE1

CPU-ROM            OK

FLASH     VERSION  AA1

FLS1      HASH     OK     27F4

LANGUAGE  VERSION  EG10

          HASH     OK     4C38

DEFAULT   VERSION  AD02

RAM1      HASH     OK     F0FF

RAM2               OK

RAM3               OK     *1      *1 marked items are not printed in OKIFAX 1050.

OPT-RAM1           OK     *2
OPT-RAM2           OK     *2      *2 marked items are options.
OPT-RAM3           OK     *2
OPT-RAM4           OK     *2

PC-I/F    VERSION  PP01   *2
          HASH     OK     1507
```

Fig. 2.9.4 Printed Data of Self-diagnosis Print Test (Example)

Copyright 1997, Okidata, Division of OKI America, Inc. All rights reserved. See the OKIDATA Business Partner Exchange (BPX) for any updates to this material. (http://bpx.okidata.com)

2.9.16 On-line Tests

2.9.16.01 Transmission

Load documents

Make sure that

The loaded documents are fed in automatically.
The STD and NORMAL lamps light.
The display shows SELECT LOCATION.

Dial the telephone number of the remote machine by the ten-key pad.

Make sure that the telephone number of the remote machine is shown on the display.

Press the START button.

Typical message transmission flow is described in Figure 2.9.5.

Copyright 1997, Okidata, Division of OKI America, Inc. All rights reserved. See the OKIDATA Business Partner Exchange (BPX) for any updates to this material. (http://bpx.okidata.com)

2.9.16.02 Reception

Use another machine for dialing.

Make sure that

The display shows AUTO REC. START. The message is automatically received.

Typical message reception flow is described in Figure 2.9.6.

Copyright 1997, Okidata, Division of OKI America, Inc. All rights reserved. See the OKIDATA Business Partner Exchange (BPX) for any updates to this material. (http://bpx.okidata.com)

Fig. 2.9.5 Typical Transmission Flow

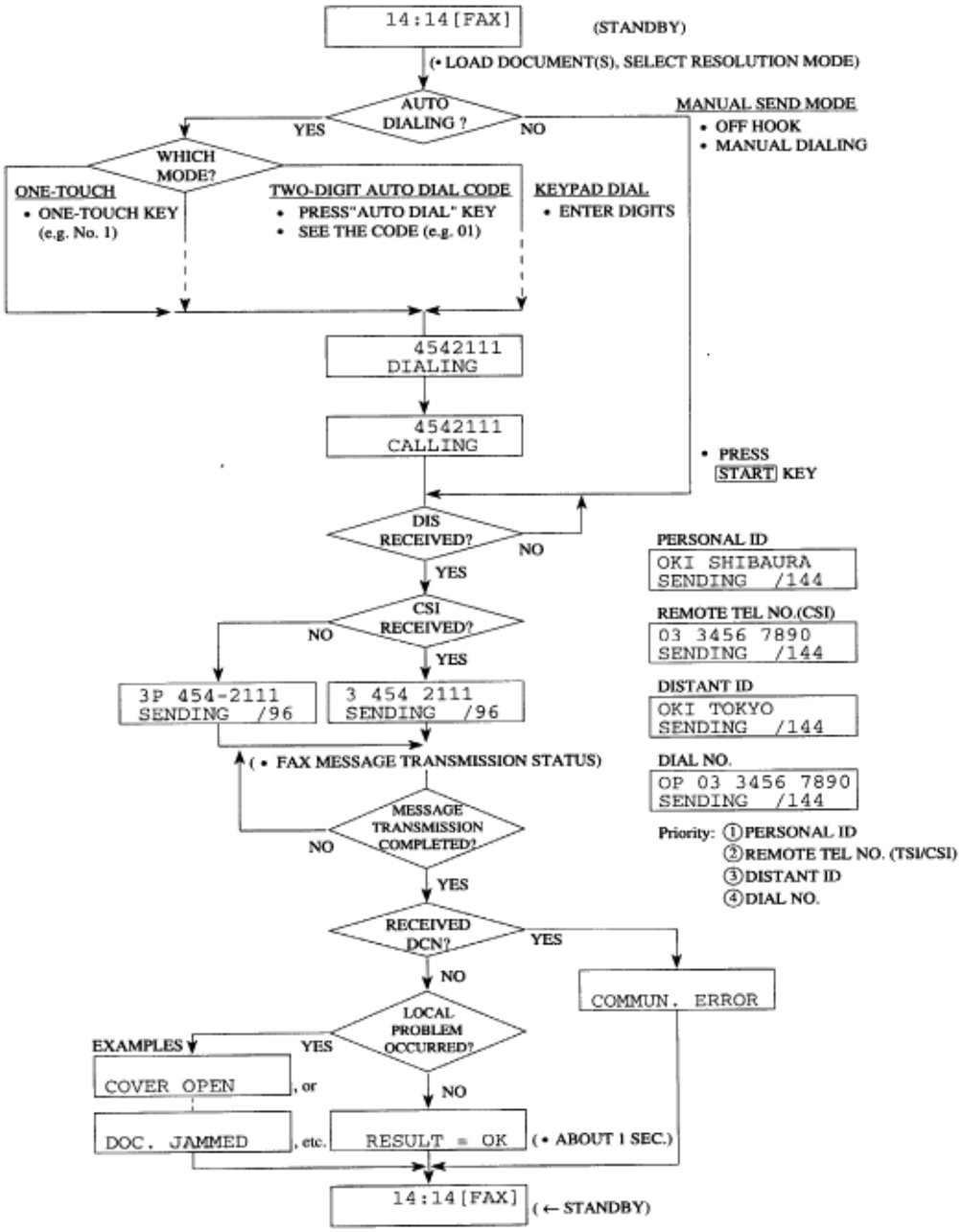

Copyright 1997, Okidata, Division of OKI America, Inc. All rights reserved. See the OKIDATA Business Partner Exchange (BPX) for any updates to this material. (http://bpx.okidata.com)

Fig. 2.9.6 Typical Reception Flow

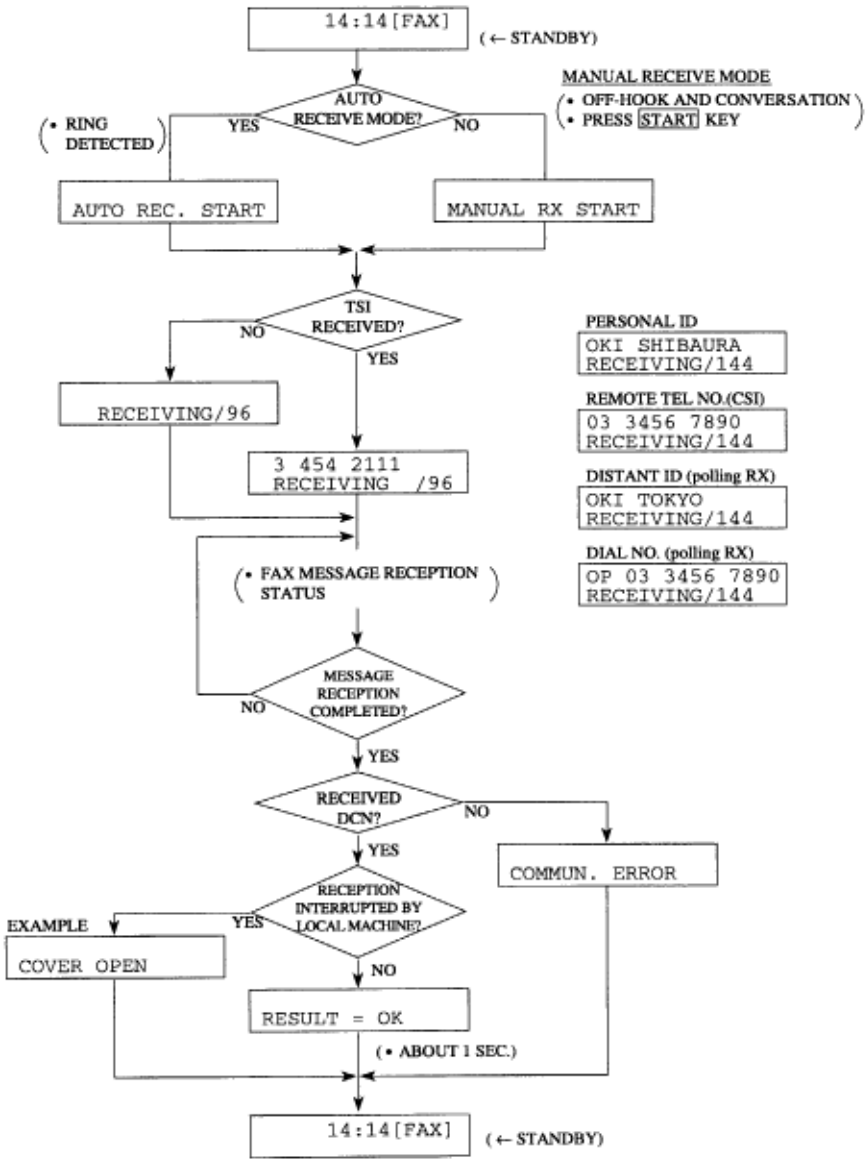

Copyright 1997, Okidata, Division of OKI America, Inc. All rights reserved. See the OKIDATA Business Partner Exchange (BPX) for any updates to this material. (http://bpx.okidata.com)

C. Installation of Optional Units

2.10.01 Items

- Memory board
- PC interface board
- Telephone handset

Copyright 1997, Okidata, Division of OKI America, Inc. All rights reserved. See the OKIDATA Business Partner Exchange (BPX) for any updates to this material. (http://bpx.okidata.com)

2.10.02 Procedure

- Turn the facsimile power switch OFF and remove the AC power cord.

Note: Unplug the AC power cord from the wall outlet first and then from the facsimile.

- Do not remove unnecessary parts.
- Since screws and small parts are easily misplaced, they should temporarily be attached to their original positions.

Copyright 1997, Okidata, Division of OKI America, Inc. All rights reserved. See the OKIDATA Business Partner Exchange (BPX) for any updates to this material. (http://bpx.okidata.com)

Installation of the memory board

In the OKIFAX 1050, one of either the MEM or MEM-2 memory board can be mounted on to the connector CN12 of the OKIFAX 1050 MCNT board. However, choose either memory board or PCIU board in order to use this connector (CN12).

In the OKIFAX 2350/2450, one of MEM, MEM-2 or MEM-3 memory board can be mounted on to the connector CN13 of the OKIFAX 2350/2450 MCNT board.

OKIFAX 1050

Remove Rear Cover Remove the rear cover by removing the two screws S1 and S2 .

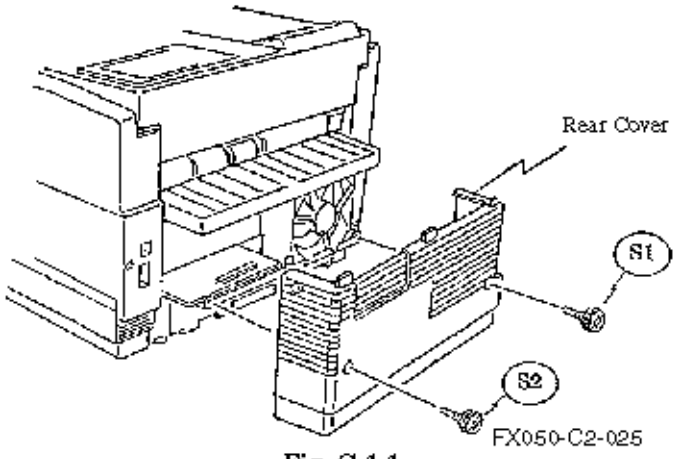

Fig. C.1.1

Install Memory Board: First, install the memory board on to the connector CN12 of the OKIFAX 1050 MCNT board, and then screw down the earth cable on the separation plate.

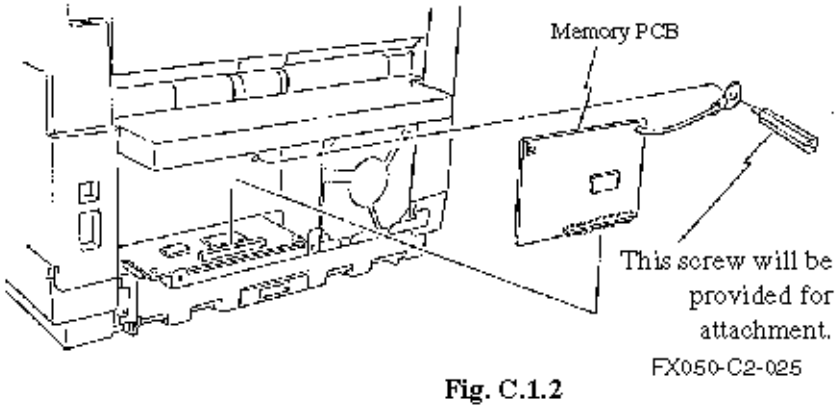

Fig. C.1.2

OKIFAX 2350/2450

Installation of the memory board of OKIFAX 2350/2450 is same as OKIFAX 1050. However, the memory board is installed on the inner side connector CN13 designated by Fig. C.1.3.

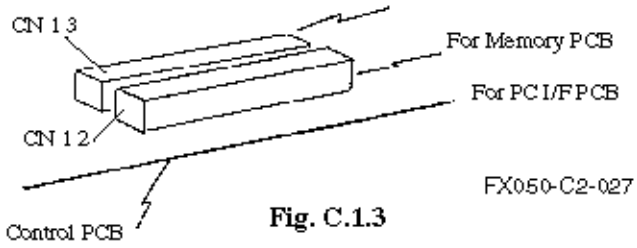

Fig. C.1.3

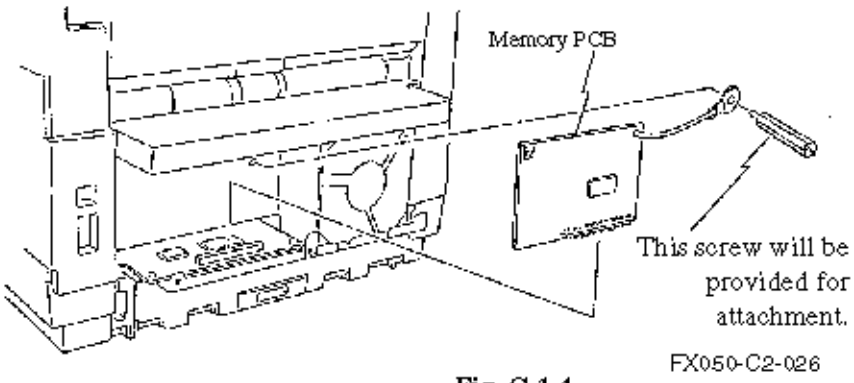

Fig. C.1.4

Note: Fit the fixing hooks an anchor positions on the cassette guide, after that, lift the rear cover slightly and push it to the inside. Tighten the two screws S1 and S2.

Copyright 1997, Okidata, Division of OKI America, Inc. All rights reserved. See the OKIDATA Business Partner Exchange (BPX) for any updates to this material. (http://bpx.okidata.com)

Installation of PCIU (PC interface) board

OKIFAX 1050

Remove Rear Cover Remove the rear cover by removing the two screws S1 and S2 .
Install PCIU board First, install PCIU board on to the connector CN12 of the OKIFAX 1050 MCNT board, and then tighten the two screws to the separation plate.

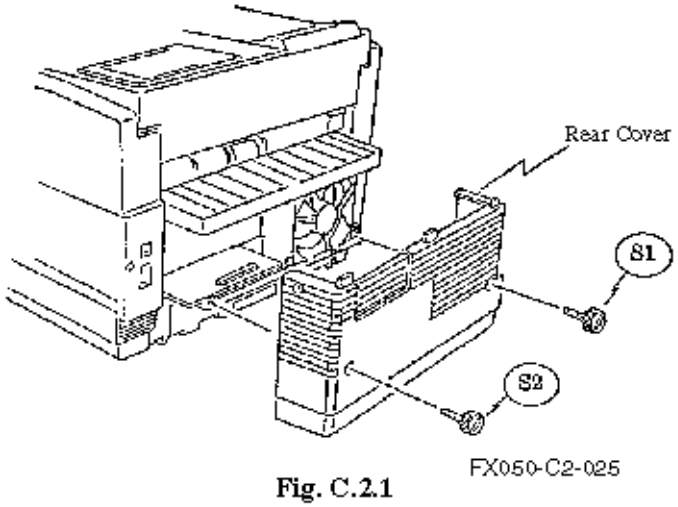

Fig. C.2.1

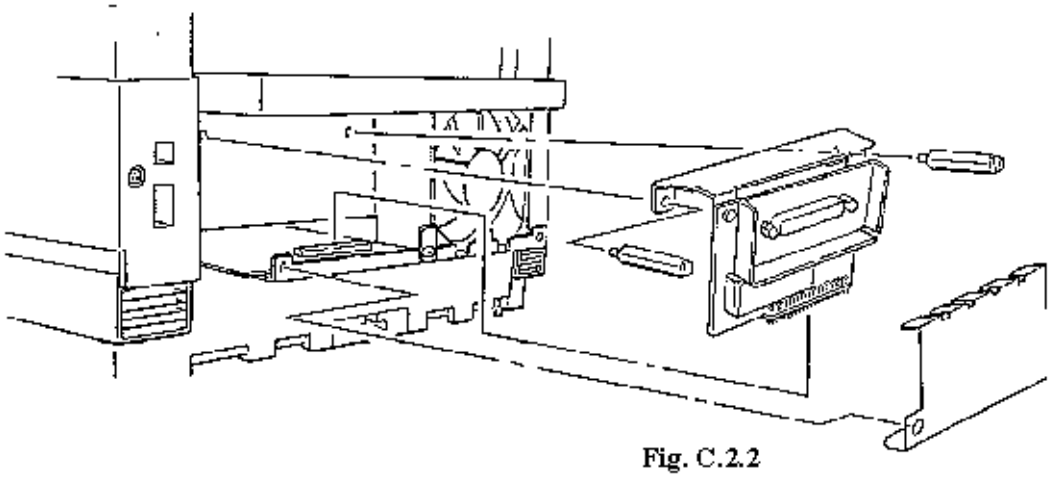

Fig. C.2.2

OKIFAX 2350/2450

Installation of PCIU board for OKIFAX 2350/2450 is same as OKIFAX 1050. However, PCIU board is installed on the outside connector designated by Fig. C.2.3.

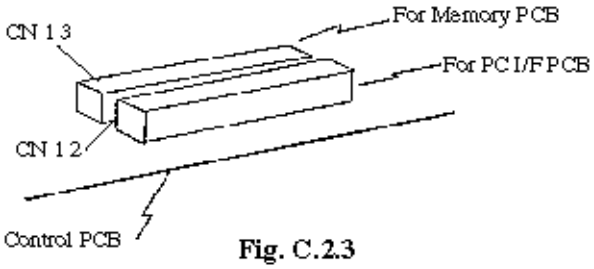

Fig. C.2.3

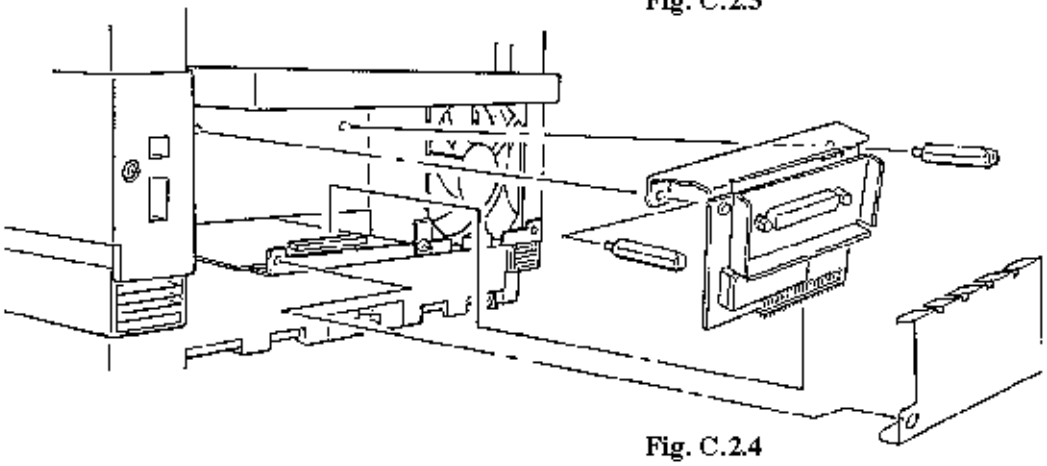

Fig. C.2.4

After having taken out the telephone set, telephone handset and curled cord from the carton box, connect them as show in Fig. C.3.2.

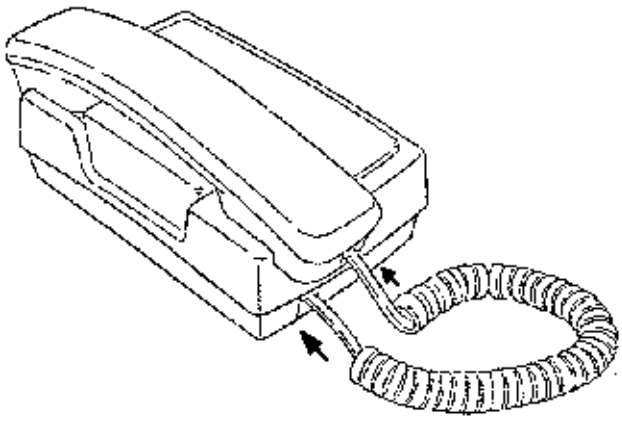

Fig. C.3.2

After installing the connection cable to the telephone set, extend the connection cable as in Fig. C.3.3.

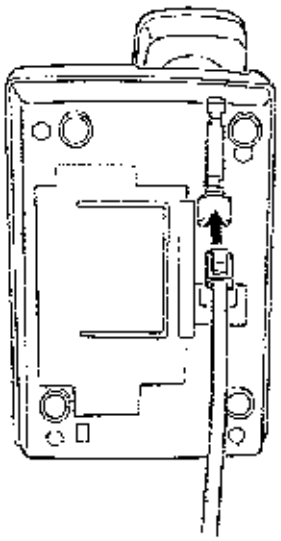

Fig. C.3.3

After installing the cradle assembly to the telephone set, fix the screw as in Fig. C.3.4.

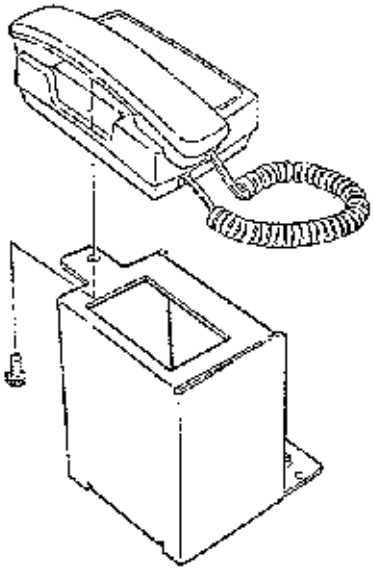

Fig. C.3.4

Install the telephone assembly on the facsimile transceiver unit. In this case, cram the telephone assembly into the position of Fig. C.3.5 by lifting the facsimile transceiver unit slightly. When 2'nd tray is mounted on the facsimile transceiver unit, install the telephone assembly in the position of Fig. C.3.5.

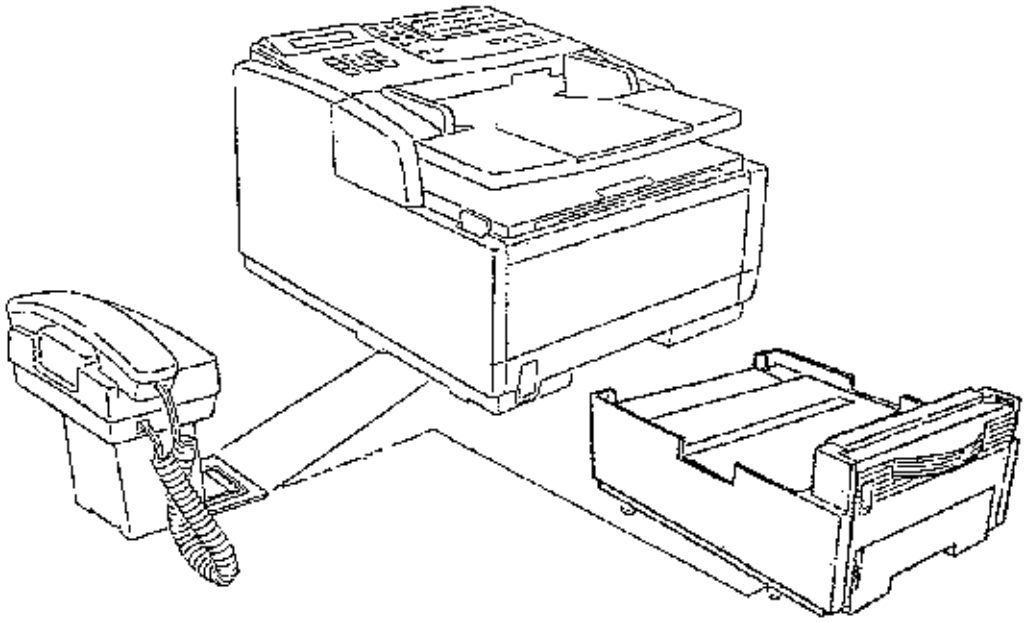

Fig. C.3.5

Connect the terminal of the other side of the connection cable formed on the rear side of the equipment, like Fig. C.3.6, to the telephone set.

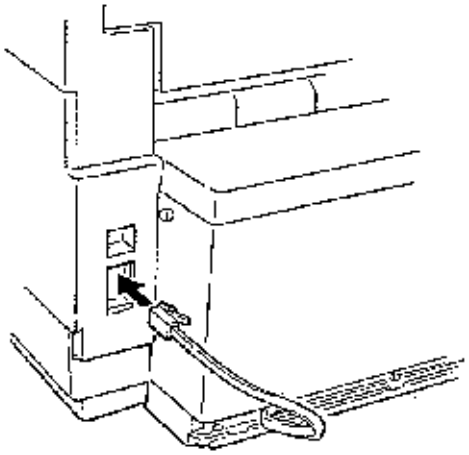

Fig. C.3.6

Copyright 1997, Okidata, Division of OKI America, Inc. All rights reserved. See the OKIDATA Business Partner Exchange (BPX) for any updates to this material. (http://bpx.okidata.com)

Section 1: Board Description

3.1 Unit Configuration and Block Diagram

3.1.01 The unit configuration of the OKIFAX 1050 is as follows:

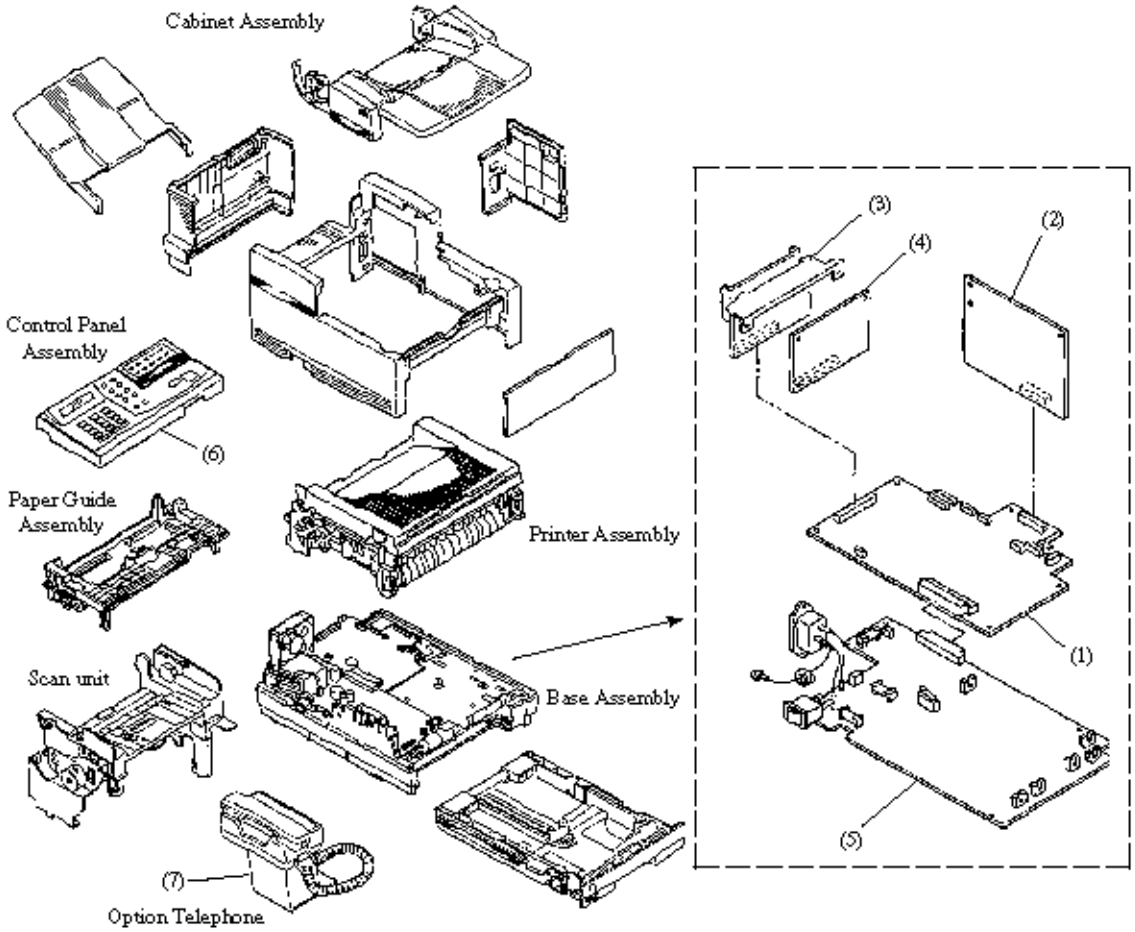

Figure 3.1.1 Unit Configuration of OKIFAX 1050

(1) Main control board (MCNT) (R054/R050)

(2) Network control unit (NCU)

(3) PC interface board (P050): option ... See note.

(4) Memory board (MEMO): option ... See note.

(5) Power supply unit (FXVE: 120 V, FXVH: 230 V)

(6) Operation panel board (YOPE)

(7) Optional Telephone (boards) Telephone interface board (TEL-U) Hook board (HOOK)

Note: Either the PC Interface or Optional Memory Board can be installed in the OKIFAX 1050. Because there is one expansion connector, however, both boards cannot be installed at the same time.

Copyright 1997, Okidata, Division of OKI America, Inc. All rights reserved. See the OKIDATA Business Partner Exchange (BPX) for any updates to this material. (http://bpx.okidata.com)

3.1.02 The unit configuration of the OKIFAX 2350/2450 is as follows:

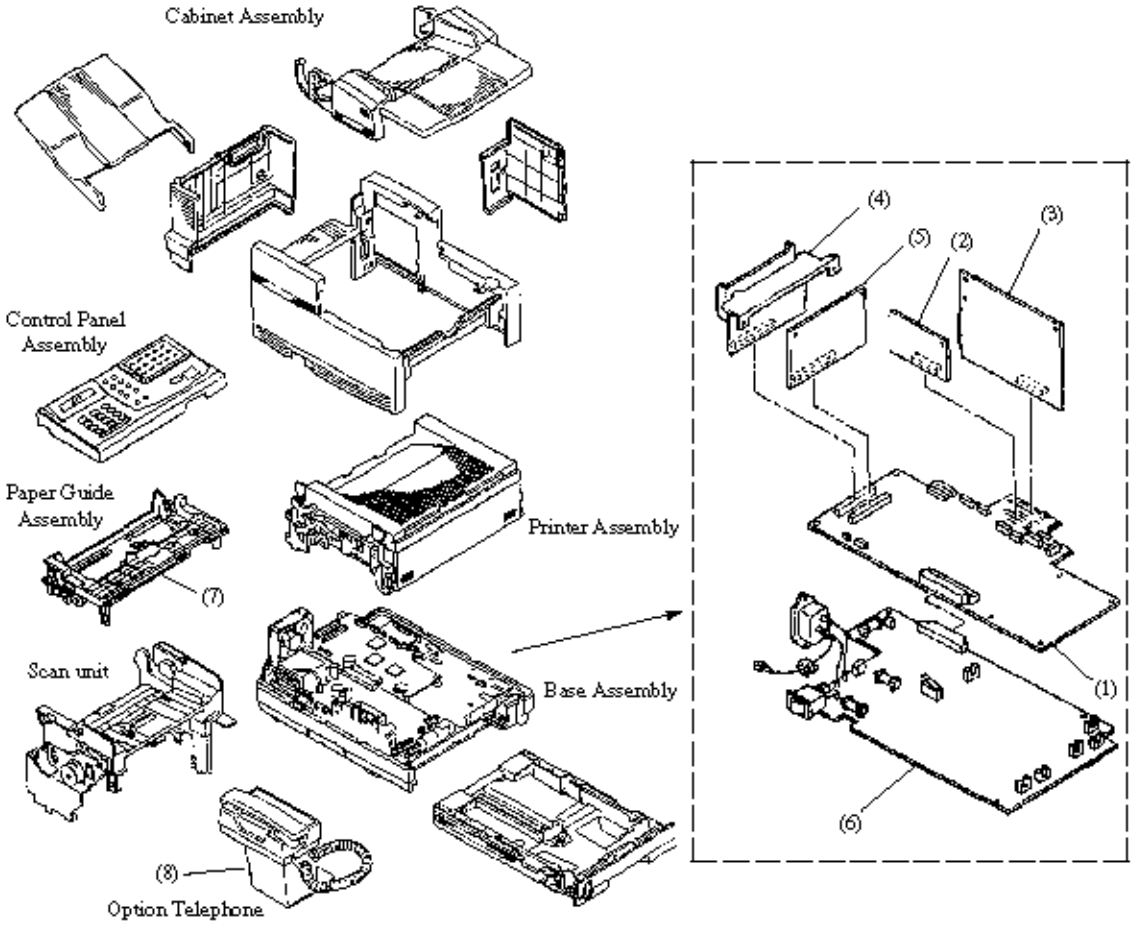

Figure 3.1.2 Unit Configuration of OKIFAX 2350/2450

(1) Main control board (R175 for OKIFAX 2350/R175-2 for OKIFAX 2450)

(2) Modem board (MODEM)

(3) Network control unit (NCU)

(4) PC interface board (P050): option

(5) Memory board (MEMO): option

(6) Power supply unit (FXVE: 120 V, FXVH: 230 V)

(7) Operation panel board (YOPE-2)

(8) Optional Telephone (boards) Telephone interface board (TEL-U) Hook board (HOOK)

Copyright 1997, Okidata, Division of OKI America, Inc. All rights reserved. See the OKIDATA Business Partner Exchange (BPX) for any updates to this material. (http://bpx.okidata.com)

3.2 Overall Dimension and Mechanical Structure of OKIFAX 1050

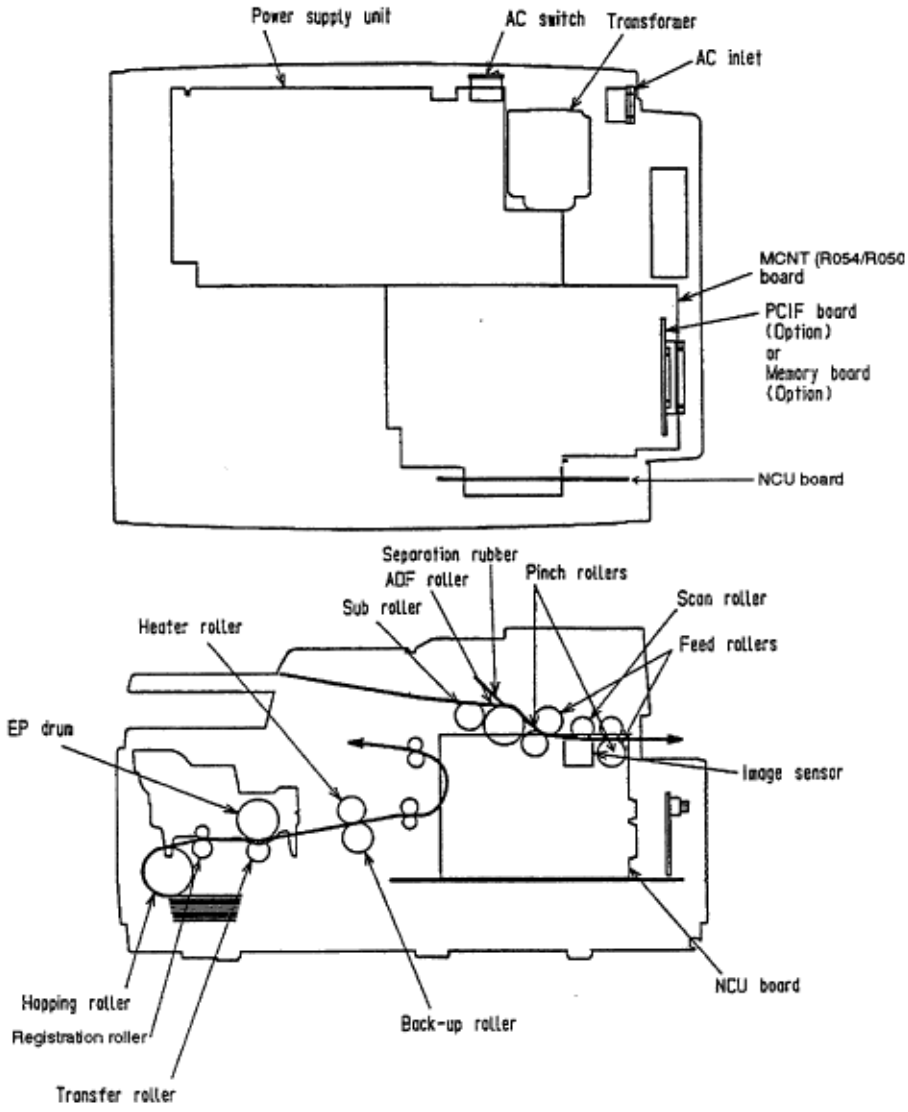

Figure 3.2. Overall Dimension and Mechanical Structure

Copyright 1997, Okidata, Division of OKI America, Inc. All rights reserved. See the OKIDATA Business Partner Exchange (BPX) for any updates to this material. (http://bpx.okidata.com)

3.3 Overall Dimension and Mechanical Structure of OKIFAX 2350/2450

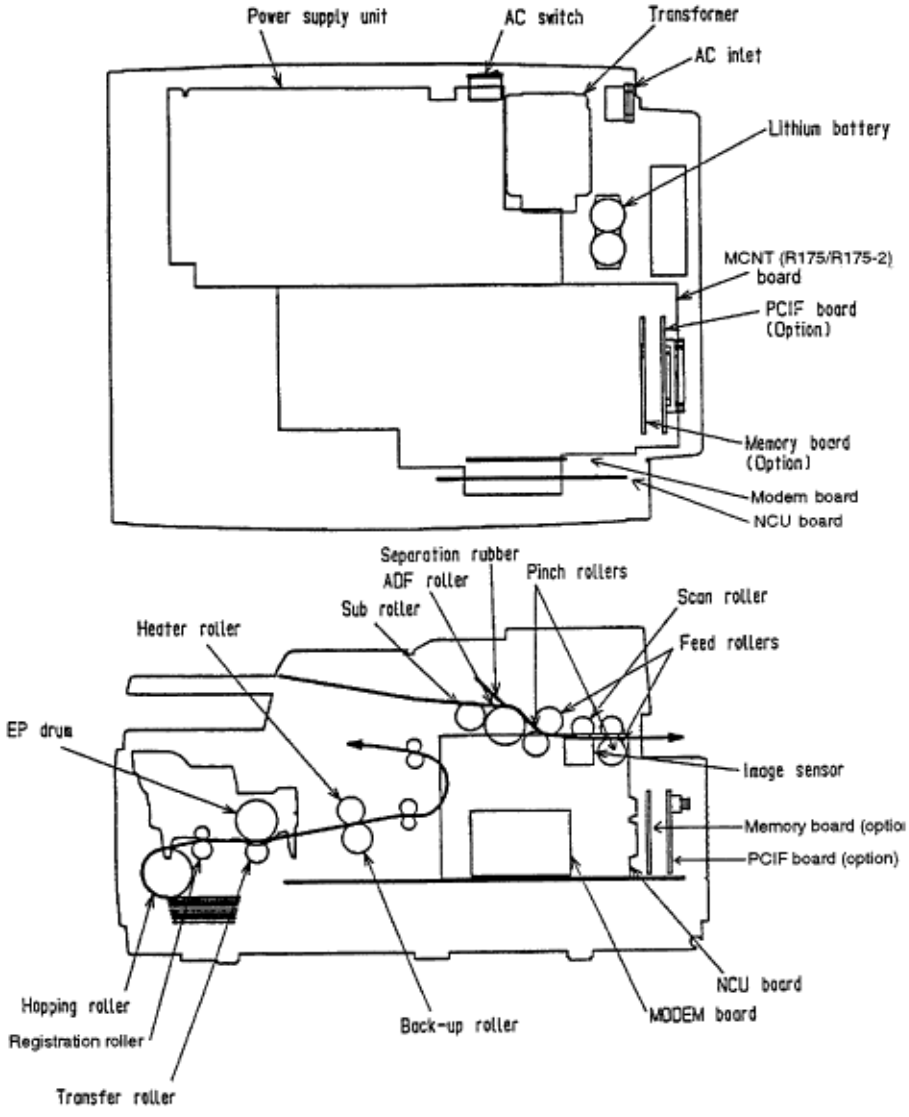

Figure 3.3 Overall Dimension and Mechanical Structure

Copyright 1997, Okidata, Division of OKI America, Inc. All rights reserved. See the OKIDATA Business Partner Exchange (BPX) for any updates to this material. (http://bpx.okidata.com)

3.4 Boards and Units

3.4.01 OKIFAX 1050 Boards and Units

The following boards, and units constitute the OKIFAX 1050 facsimile transceiver machine.

Main control board MCNT: (R054/R050)
Network control unit board NCU: (NCUU)
Memory board (option) MEM: (MEMO; 0.5MB, MEMO-2; 1MB)
Telephone interface board (option) TEL: (TEL-U, HOOK)
PC interface board (option) PC I/F: (PCIU)
Operation panel assembly unit OPE: (YOPE)
Power supply unit POW UNIT: (FXVE, FXVH)
Printer unit

Figure 3.3.1 shows the block diagram of OKIFAX 1050 facsimile transceiver.

3.4.02 OKIFAX 2350/2450 Boards and Units

The following boards and units constitute the OKIFAX 2350/2450 facsimile transceiver machine.

Main control board MCNT: (OKIFAX 2350, R175; OKIFAX 2350/2450)
Modem board MODEM: (MODE; 9.6kbps, MODE-2; 14.4 kbps)
Network control unit board NCU: (NCUU)
Memory board (option) MEM: (MEMO; 0.5MB, MEMO-2; 1MB, MEMO-3; 2MB)

Telephone interface board (option) TEL: (TEL-U, HOOK)
PC interface board (option) PC I/F: (PCIU)
Operation panel assembly unit OPE: (YOPE-2)
Power supply unit POW UNIT: (FXVE, FXVH)
Printer unit

Figure 3.4.2 shows the block diagram of OKIFAX 2350/2450 facsimile transceiver.

Copyright 1997, Okidata, Division of OKI America, Inc. All rights reserved. See the OKIDATA Business Partner Exchange (BPX) for any updates to this material. (http://bpx.okidata.com)

3.5 Function of Each Board

The section describes the principal functions of the individual units of the OKIFAX 1050/2350/2450 electrical sections.

Figure 3.5.1 and 3.5.2 shows the pertinent block diagram.

3.5.01 Main Control (MCNT) R054/R050 (OKIFAX 1050)/R175 (OKIFAX 2350)/R175-2 (OKIFAX 2450) board

- CPU
  - Basic processor
  - Scanning control
  - Picture processing control
  - Printing control
  - SIO (Serial input/output) control
- IOGA (Input/output gate array)
  - Image Sensor control
  - Image smoothing
  - Strobe signals control for LED head
  - Printer control
  - Peripheral input/output control (Second Tray Unit, PC Interface)
- Flash ROM (Instead of EPROM and SRAM)
  - Memory storage for system program, user and technical function programming and defaults
- DRAM (For OKIFAX 1050)/P-SRAM (For OKIFAX 2350/2450)
  - Memory storage for ECM operations, memory broadcast, delayed broadcast, etc.
- Back-up battery circuit
  - Nonrechargable lithium battery supplies voltage to the real time clock which maintains the system time and date clock.
- Real-time clock IC
  - Used as a timepiece to display the date and time.
- Audio monitor circuit
- Contact image sensor control
- I EXSEED (For OKIFAX 2350/2450)
  - Image data processing
- SRAM (For OKIFAX 2350/2450)
  - Memory storage for image picture data Interface for optional memory, PC Interface, HSLS
- Supervision of the following external statuses:
  - Presence of document on hopper (ADF sensor PC1)
  - Presence of document at scanning position (ADF sendor PC2)
- Send motor control
- Fan motor control
- Main motor control Registration motor control
- Modem chip (For OKIFAX 1050) and Modem board (For OKIFAX 2350/2450)
  - Modulation and demodulation for V.33 and V.17 (For OKIFAX 2450 / OKIFAX 2350: Option)
  - Modulation and demodulation for V.29 and V.27 ter

Modulation and demodulation for V.21
D/A converter for SEND DATA (TX)
A/D converter for RECEIVE DATA (RX)
Amplitude equalizer for RX DATA
Selectable attenuation for TX (via programming)
Automatic gain control
Generation of single-frequency signals for tonal signals
Detection of single-frequency tonal signals
Generation of Dual Time Multiple-Frequency signals for tone dialing

---

Copyright 1997, Okidata, Division of OKI America, Inc. All rights reserved. See the OKIDATA Business Partner Exchange (BPX) for any updates to this material. (http://bpx.okidata.com)

3.5.02 Operation panel unit: YOPE (OKIFAX 1050)/YOPE-2 (OKIFAX 2350/2450) board

Note: Operation Panel Unit must be replaced as an assembly. Individual boards are not available.

Supervision of switches on operation panel
Control of LEDs on operation panel
Control of LCD on operation panel

LED: Light-emitting diode LCD: Liquid crystal display

Copyright 1997, Okidata, Division of OKI America, Inc. All rights reserved. See the OKIDATA Business Partner Exchange (BPX) for any updates to this material. (http://bpx.okidata.com)

3.5.03 NCUU board

Conversion of receive data and receive signals to internal signal level
Conversion of send data and send signals to external signal level
Generation of dial pulses to telephone line
Detection of ringing signal
Detection of busy tone (conjunction with Modem unit)
Detection of hook signal (on hook /off hook indication) Interface with telephone handset (option) Output of send data and send signals to telephone line
Input of receive data and receive signals from telephone line

Copyright 1997, Okidata, Division of OKI America, Inc. All rights reserved. See the OKIDATA Business Partner Exchange (BPX) for any updates to this material. (http://bpx.okidata.com)

3.5.04 Power supply unit: FXVE (120V)/FXVH (230V) board

Conversion of main alternating current to the following direct currents:

+5V DC power supply
+8V DC/-8V DC power supply
+30V DC power supply

Supplying of main alternating current to fuser unit

Generation of medium voltages +300V, -300V, +400V, -450V and 0V

Generation of high voltages -1.35 kV, -0.75 kV and +1 kV

Copyright 1997, Okidata, Division of OKI America, Inc. All rights reserved. See the OKIDATA Business Partner Exchange (BPX) for any updates to this material. (http://bpx.okidata.com)

3.5.05 MEMO (memory) board (Option)

P-SRAM
: Memory storage for ECM operations, memory broadcast, delayed broadcast, etc.

Copyright 1997, Okidata, Division of OKI America, Inc. All rights reserved. See the OKIDATA Business Partner Exchange (BPX) for any updates to this material. (http://bpx.okidata.com)

3.5.06 P050 board (Optional PC Interface)

The P050 board is used as an interface between the OKIFAX units and PC compatible computer

Copyright 1997, Okidata, Division of OKI America, Inc. All rights reserved. See the OKIDATA Business Partner Exchange (BPX) for any updates to this material. (http://bpx.okidata.com)

3.5.07 HOOK board (Optional handset)

Hook switch circuit

Copyright 1997, Okidata, Division of OKI America, Inc. All rights reserved. See the OKIDATA Business Partner Exchange (BPX) for any updates to this material. (http://bpx.okidata.com)

3.5.08 TELU board (Option): For US and Canada

Speech network circuit

Copyright 1997, Okidata, Division of OKI America, Inc. All rights reserved. See the OKIDATA Business Partner Exchange (BPX) for any updates to this material. (http://bpx.okidata.com)

3.5.09 TQSB board (installed within second paper cassette option)
Second paper cassette unit for OKIFAX 2350/2450.

MOS-CPU
Motor control Interfaces with the
Main Control Board to provide second paper cassette control

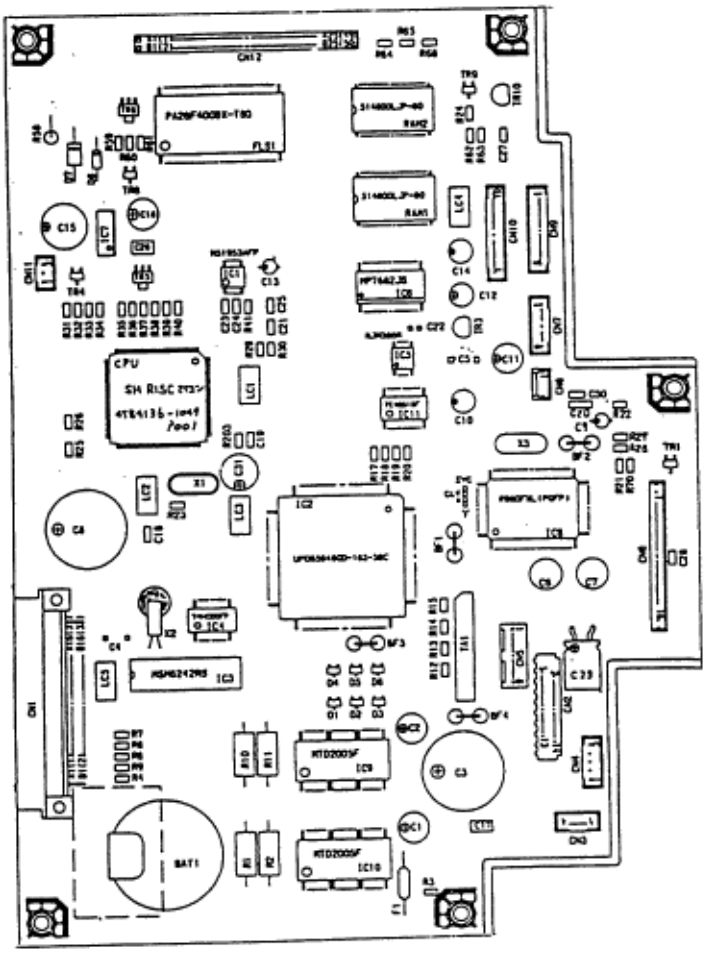

R054 Package Layout (OKIFAX 1050)

Copyright 1997, Okidata, Division of OKI America, Inc. All rights reserved. See the OKIDATA Business Partner Exchange (BPX) for any updates to this material. (http://bpx.okidata.com)

Meaning of abbreviations used in Block Diagram

A/D: Analog-to-digital converter
AMP: Amplifier
BATT: Battery
CNi: Connector number i
CPU: Central processing unit
D-MOTOR: Drum motor
DRV: Motor drive
DRAM: Dynamic random-access memory
EXSEE: Image processing gate array
FAN: Fan motor
FLASH: Flash memory
IOGA 1: Input output gate array
IOGA 2: Input output gate array
PCi: Photocoupler number i
POW.UNIT: Power supply unit
PSRAM: Pseudo-SRAM
R-MOTOR: Resist motor
RTC: Real time clock
S-MOTOR: Send motor
SRAM: Static random-access memory
Xtal: Crystal oscillator

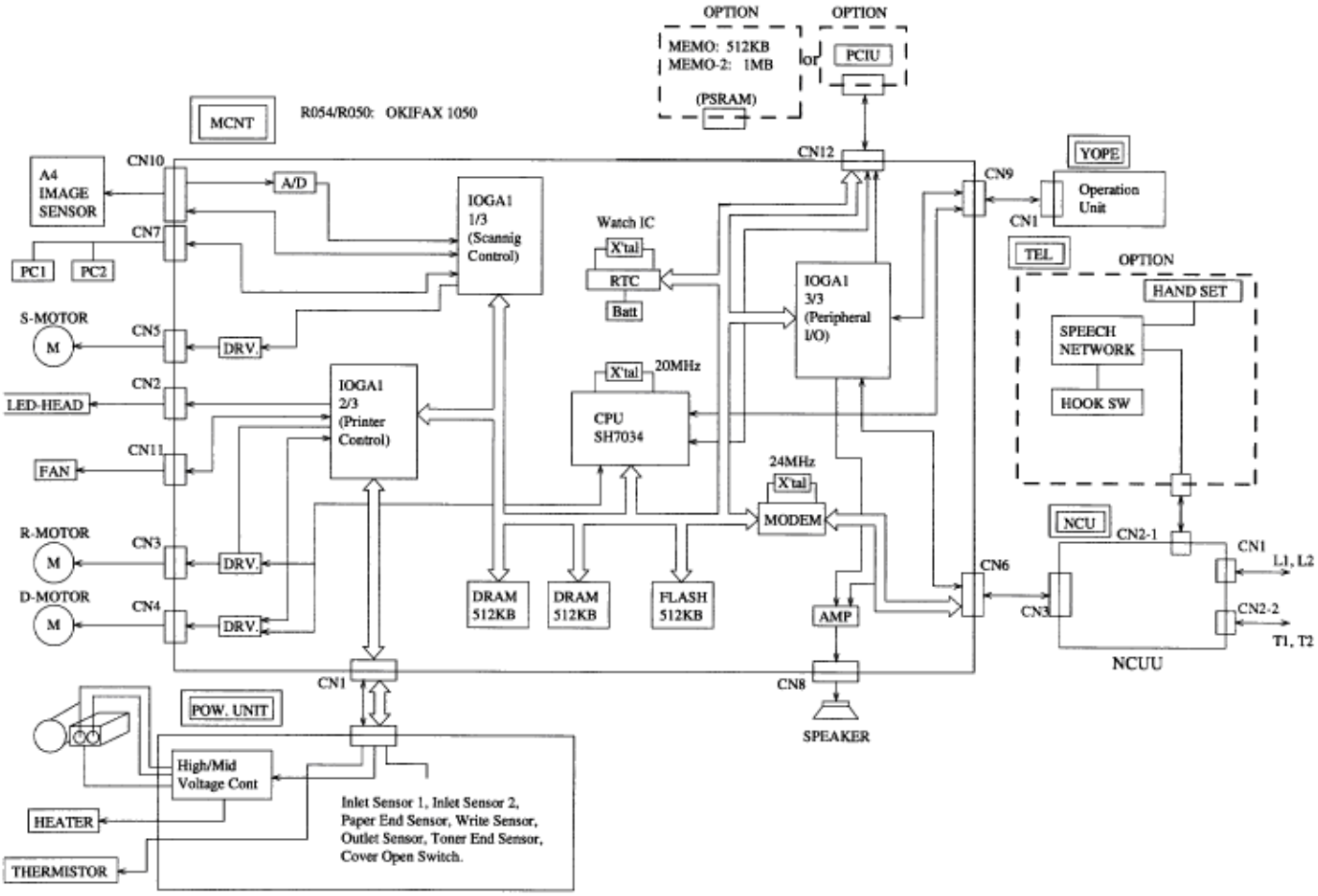

Figure 3.5.1 OKIFAX 1050 Block Diagram

Copyright 1997, Okidata, Division of OKI America, Inc. All rights reserved. See the OKIDATA Business Partner Exchange (BPX) for any updates to this material. (http://bpx.okidata.com)

Figure 3.5.2 OKIFAX 2350/2450 Block Diagram

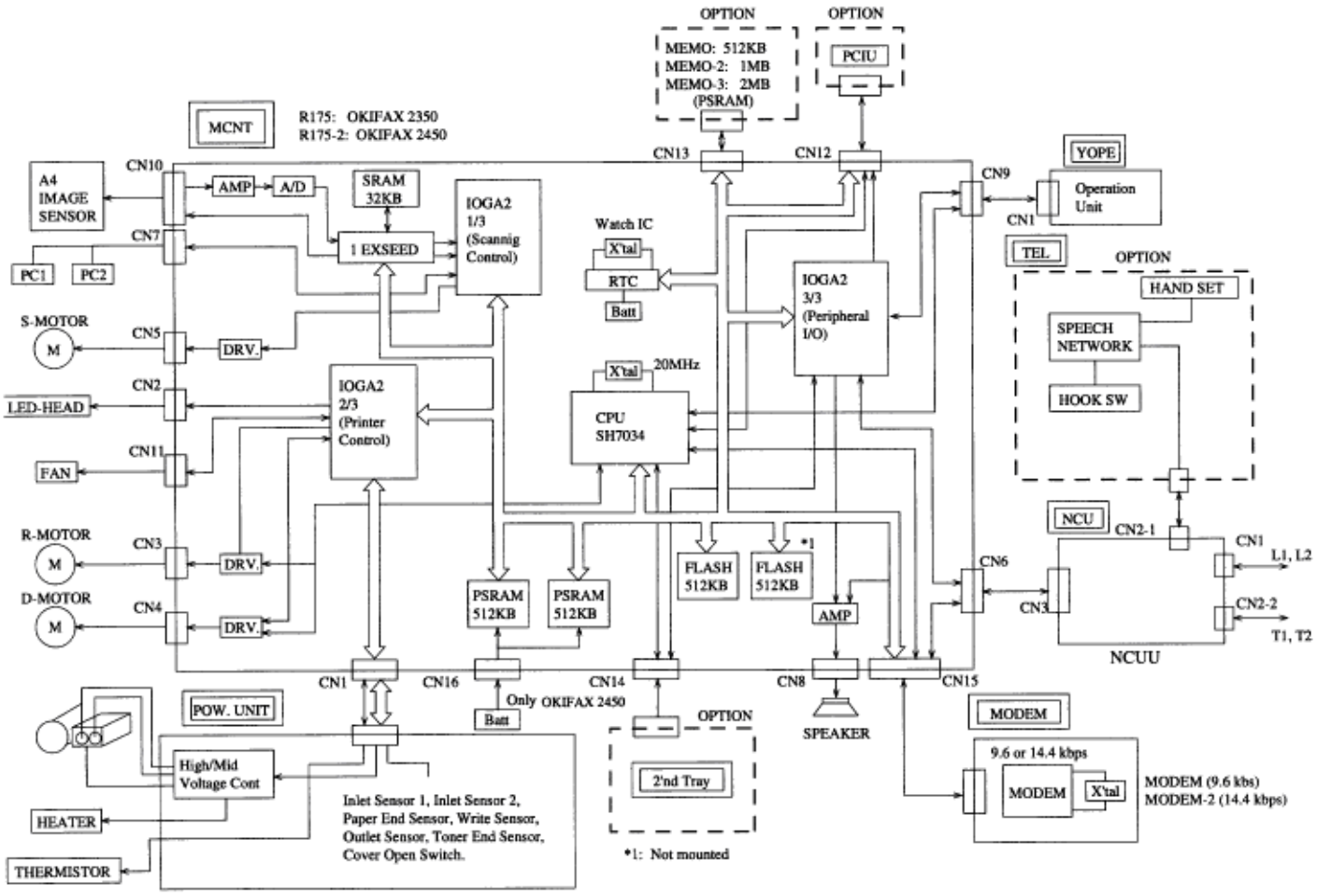

Copyright 1997, Okidata, Division of OKI America, Inc. All rights reserved. See the OKIDATA Business Partner Exchange (BPX) for any updates to this material. (http://bpx.okidata.com)

3.6 Explanation of Signal Flow for OKIFAX 1050/2350/2450

Note: Regarding the difference of the signal flow between OKIFAX 1050 and OKIFAX 2350/2450, since one-line scanning processing speed of OKIFAX 2350/2450 is faster in comparison with OKIFAX 1050, to the circuit diagram of OKIFAX 2350/2450 has added the EXSEED (image processing LSI) and SRAM (dark/light level correction data). Otherwise, the signal flow is almost the same as in OKIFAX 1050.

3.6.01 Copy Mode

Copy mode for OKIFAX 1050

Figure 3.7.1 shows the picture signal route in local copy mode for OKIFAX 1050

One-line picture data is transferred to A/D converter (analog/digital converter) from the scanning unit (CIS: contact image sensor) as an analog data. After conversion from analog data to 6-bit digital data by A/D converter, the picture data is sent to DRAM (line memory) via IOGA by DMA (Direct Memory Access). Then the picture data is sent to IOGA again. Here, the picture data undergoes various kinds of picture processings (IOGA and CPU), and is converted to two-level binary data (black and white). The one-line binary data from IOGA is stored into DRAMs (page memory). When the data for one page has been stored in the DRAMs, the data is read out from the DRAMs and sent to IOGA. The data is converted into a serial data by the picture control of IOGA and transferred to the LED print head for printing as HDATA. Writing of data into the page memory is also possible during the printing operation.

Copy mode for OKIFAX 2350/2450

Figure 3.8.1 shows the picture signal route in local copy mode for OKIFAX 2350/2450

One-line picture data is transferred to A/D converter (analog/digital) via operational amplifier from the scanning unit (CIS: contact image sensor) as an analog data. After conversion from analog data to 6-bit digital data by A/D converter, the picture data is sent to EXSEED (image processing LSI) and SRAM. Here, the picture data undergoes various kinds of picture processings (EXSEED and SRAM), converted to two-level binary data (black and white) and then sent to IOGA (scanning control). The one-line binary picture data from IOGA is stored into P-SRAM (pseudo-SRAM). When the data for one page has been stored in the P-SRAM, the data is read out from the P-SRAM and sent to IOGA. The data is converted into a serial data by the picture control of IOGA and transferred to the LED print head for printing as HDATA. Writing of data into the page memory is also possible during the printing operation.

3.6.02 G3 Send Mode

Figure 3.7.4 (For OKIFAX 1050)/Figure 3.8.4 (For OKIFAX 2350/2450) show the G3 send picture signal route

In the G3 mode, the data transfer route from the scan unit up to the DRAM (for OKIFAX 1050)/ P-SRAM (for OKIFAX 2350/2450) is the same as in the copy mode described in 3.6.01.

The picture data for one-line is transferred from DRAM/P-SRAM to CPU. The CPU performs the picture data processing (encode) for this picture data (FILLER, fill bits are inserted) and again stored into the DRAM/P-SRAM. The stored encoded data is output from DRAM/P-SRAM to the MODEM under the control of CPU. After modulation, the picture signal S (TXOUT) is sent to the NCU board as the transmission data. The transmission data S goes through the amplifier and is sent to the telephone line L1 and L2 via the transformer T1 as high speed signal.

3.6.03 G3 receive Mode

Figure 3.7.5 (For OKIFAX 1050)/Figure 3.8.5 (For OKIFAX 2350/2450) show the G3 receive picture signal route

In the G3 mode, the high-speed picture signal arriving from the telephone line at L1 and L2 of NCU passes through the transformer T1 and the amplifier and is input to the MODEM as R signal. After demodulation by modem, the picture data is sent to CPU. The CPU performs the picture data processing (decode) for this picture data and stores into the DRAM (for OKIFAX 1050)/P-SRAM (for OKIFAX 2350/2450), Then, the stored picture data is again written into DRAM/P-SRAM (as a page memory) by the picture processing control of CPU. When the data for one page has been stored in the DRAM/P-SRAM, the data is read out from the DRAM/P-SRAM and sent to IOGA. The picture data is converted into a signal data by the printer control of IOGA and transferred to the LED print head for printing as HDATA.

3.6.04 300bps Send Mode

Figure 3.7.2 (For OKIFAX 1050)/Figure 3.8.2 (For OKIFAX 2350/2450) show 300bps send protocol signal route

In G3 communication, this is the route of the procedural control signals (pre-message, post-message phases etc.) at 300bps.

The protocol send data is read into DRAM (for OKIFAX 1050)/P-SRAM (for OKIFAX 2350/2450) in the sequence the contents of various data stored in the FLASH memory area in advance under the control of CPU. The contents of the frame has been edited on the DRAM/P-SRAM by CPU and sent to MODEM via CPU. HDLC (high level data link control) frame of the data is structured by the modem and converted to serial data in synchrony with the modems DCLK (data clock). After modulation, the protocol signal is output from S of the modem and sent to the telephone line L1 and L2 via the transformer T1 of NCU.

3.6.05 300bps Receive Mode

Figure 3.7.3 (For OKIFAX 1050)/Figure 3.8.3 (For OKIFAX 2350/2450) show 300bps receive protocol signal route.

In G3 communication, this is the route of the procedural control signals (pre-message, post-message phases etc.) at 300bps.

The 300bps modulated signals received via the telephone line L1 and L2 of the NCU and sent from pin R to Pin RXIN of the modem. After demodulation by the modem, the demodulated digital signals are sent to the CPU via the data bus from the modem. The data is read and decoded by the CPU and written into the DRAM/P-SRAM. The written data is interpreted according to bit assignment of the binary procedural signals in the ITU recommendations. The successive modes of communication (for example, line density, encoding scheme, etc.) are determined.

3.6.06 Report Printing

This signal route describes the printing route of character data used to print Activity Report, Message Confirmation Report, etc.

The report data is read into DRAM (for OKIFAX 1050)/P-SRAM (for OKIFAX 2350/2450) in the sequence the contents of data stored in the FLASH memory in advance under the control of CPU. The contents of data is edited on the DRAM/P-SRAM. The data is read out from the DRAM/P-SRAM and sent to IOGA. The data is converted into a serial data by the picture control of IOGA and transferred to the LED print head for printing as HDATA.

3.6.07 Memory Transmission

This signal route describes the memory transmission used in broadcast mode, delayed broadcast mode, etc.

The stored encoded data undergoes buffering, passes through CPU, MODEM and NCU and then sent out to the telephone line.

3.6.08 Memory Reception

This signal route describes the memory reception used in no-paper mode, no-toner reception, confidential mode, etc.

The encoded data received by the same route of (3) G3 receive mode undergoes the picture data processing and stored into memory (DRAM for OKIFAX 1050/P-SRAM for OKIFAX 2350/2450) as such. In case of printing, When the data for one page has been stored in the memory (DRAM/P-SRAM), the data is read out from the memory and sent to IOGA. The printed data is converted into a serial data by the printer control of IOGA and transferred to the LED print head for printing as HDATA.

Copyright 1997, Okidata, Division of OKI America, Inc. All rights reserved. See the OKIDATA Business Partner Exchange (BPX) for any updates to this material. (http://bpx.okidata.com)

3.7 Signal Flow by Mode of operation (OKIFAX 1050)

3.7.01 Copy picture signal Figure 3.7.1 shows the picture signal route in local copy mode.

3.7.02 300 bps send signal Figure 3.7.2 shows the 300 bps send protocol signal route.

3.7.03 300 bps receive signal Figure 3.7.3 shows the 300 bps receive protocol signal route.

3.7.04 G3 send picture signal Figure 3.7.4 shows the G3 send picture signal route.

3.7.05 G3 receive picture signal Figure 3.7.5 shows the G3 receive picture signal route.

3.7.06 Report print signal Figure 3.7.6 shows the report print signal route.

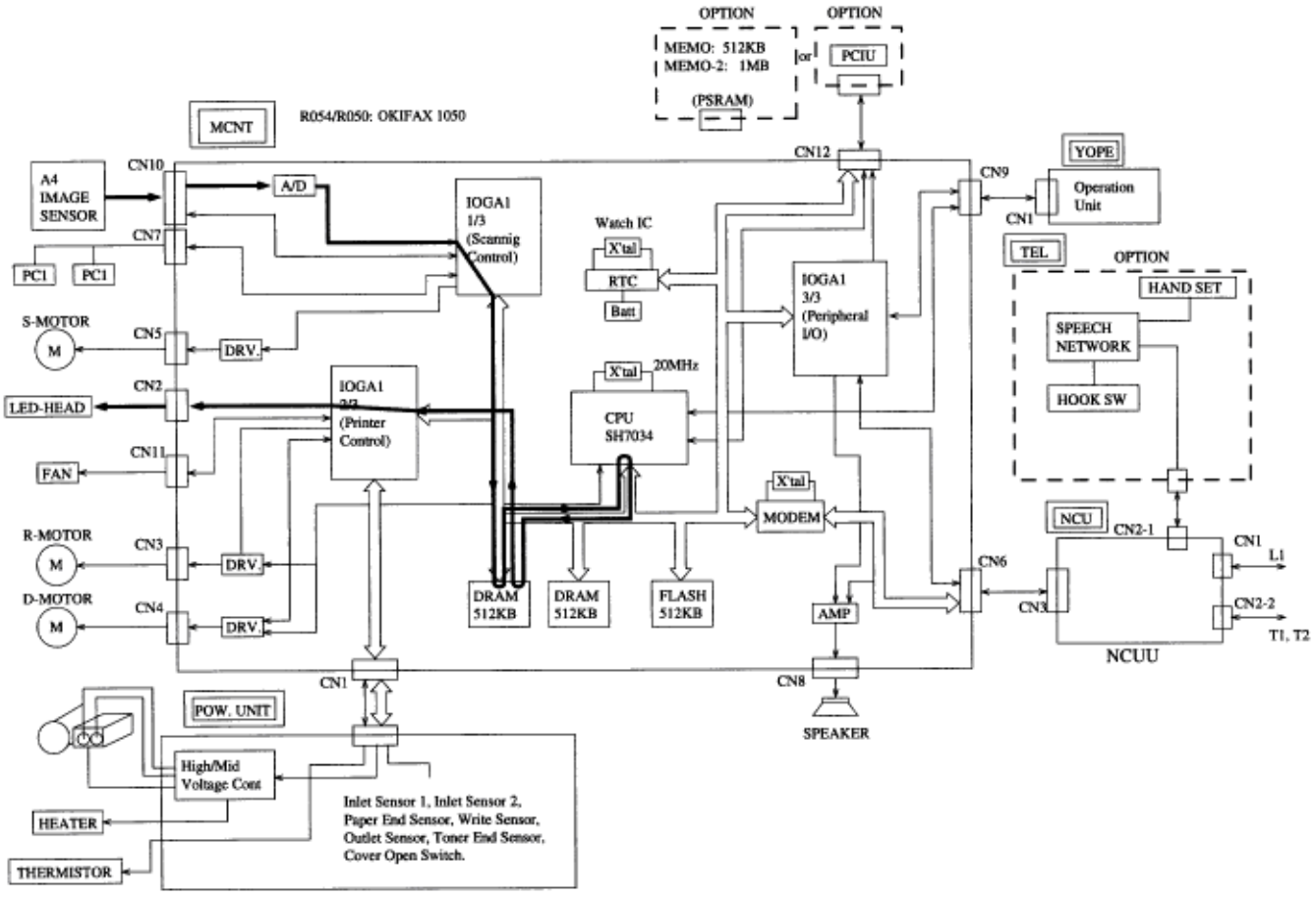

Copyright 1997, Okidata, Division of OKI America, Inc. All rights reserved. See the OKIDATA Business Partner Exchange (BPX) for any updates to this material. (http://bpx.okidata.com)

Okifax 1050 300 bps Send Signal

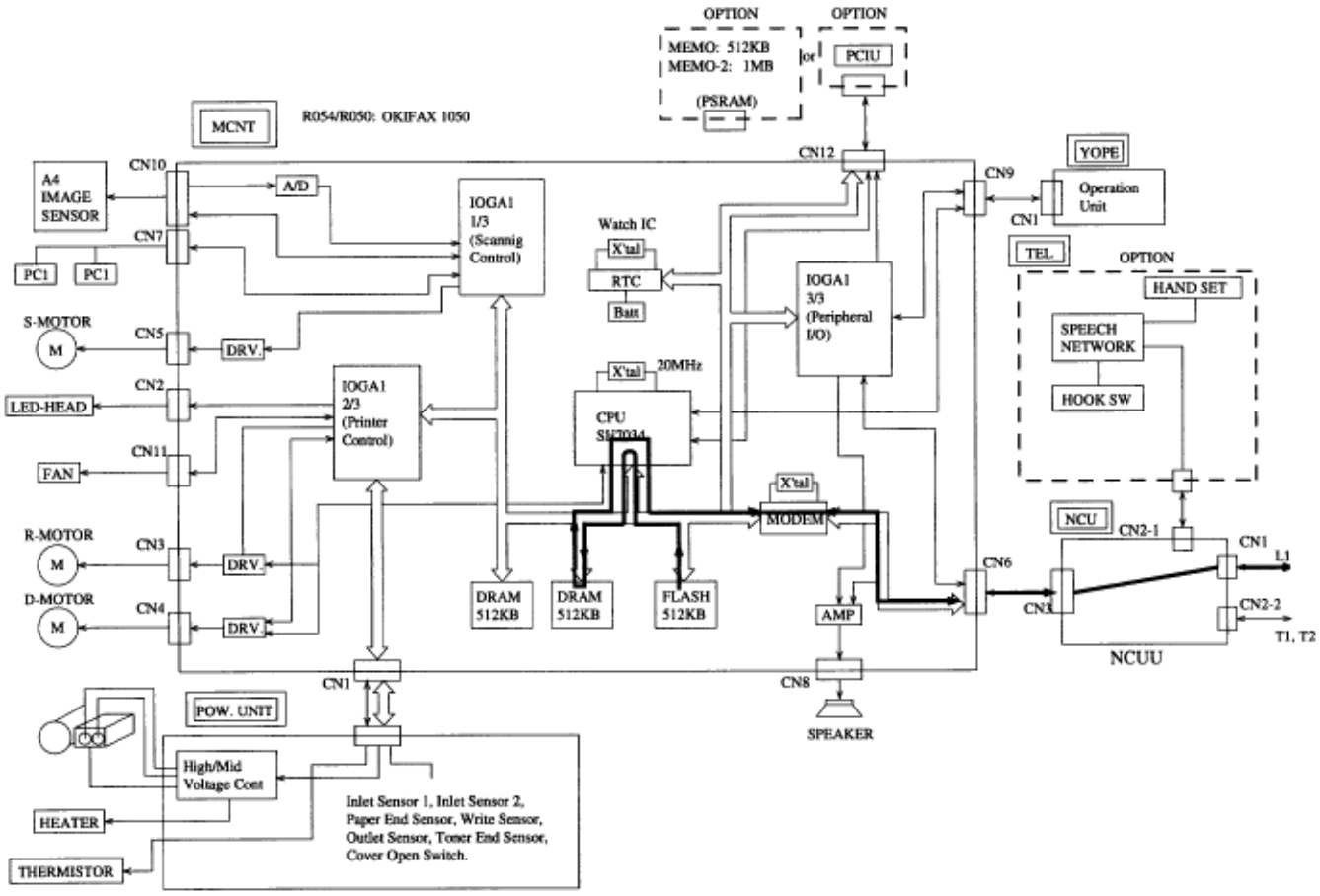

Copyright 1997, Okidata, Division of OKI America, Inc. All rights reserved. See the OKIDATA Business Partner Exchange (BPX) for any updates to this material. (http://bpx.okidata.com)

Okifax 1050 300 bps Receive Signal

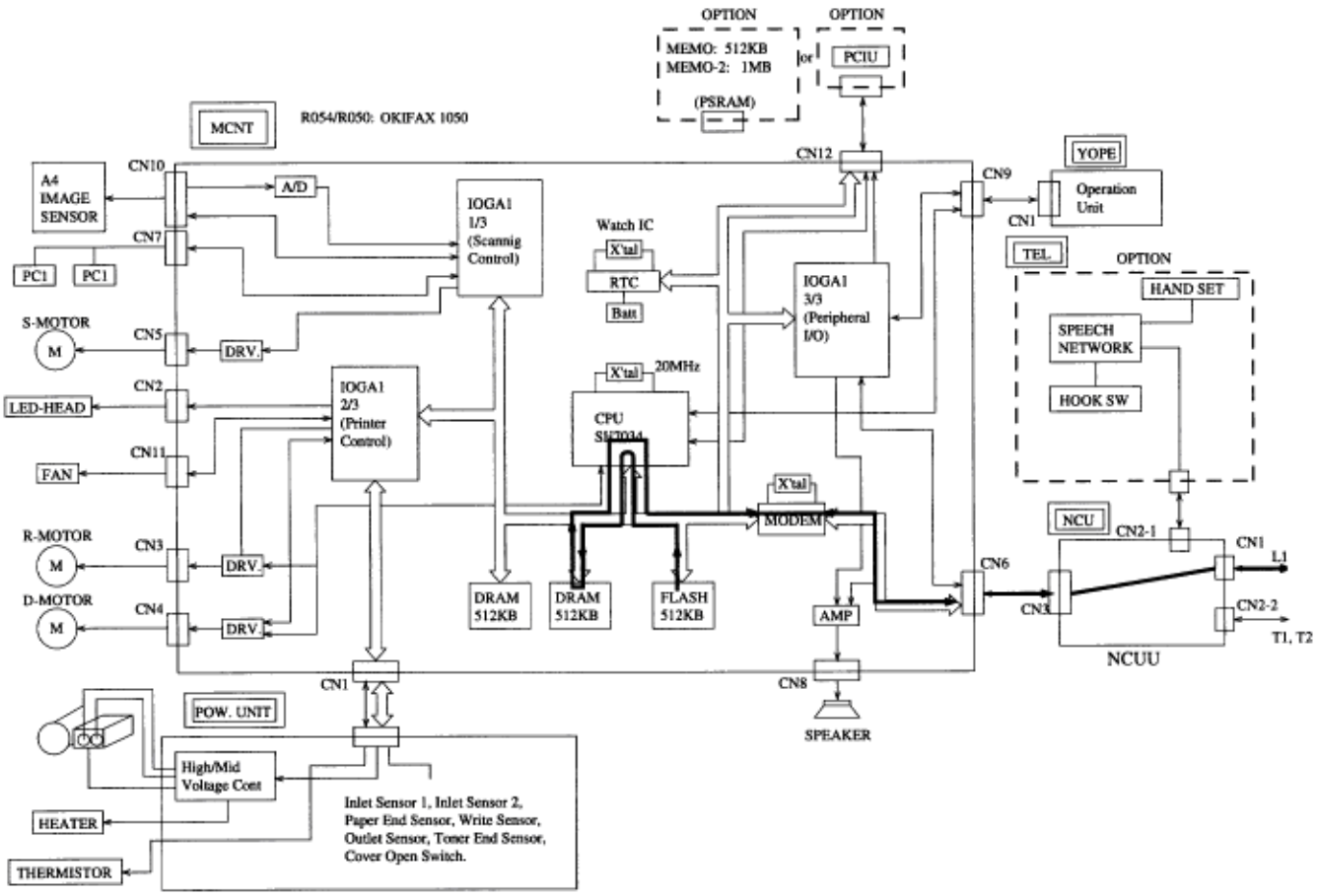

Copyright 1997, Okidata, Division of OKI America, Inc. All rights reserved. See the OKIDATA Business Partner Exchange (BPX) for any updates to this material. (http://bpx.okidata.com)

Okifax 1050 G3 Send Picture Signal

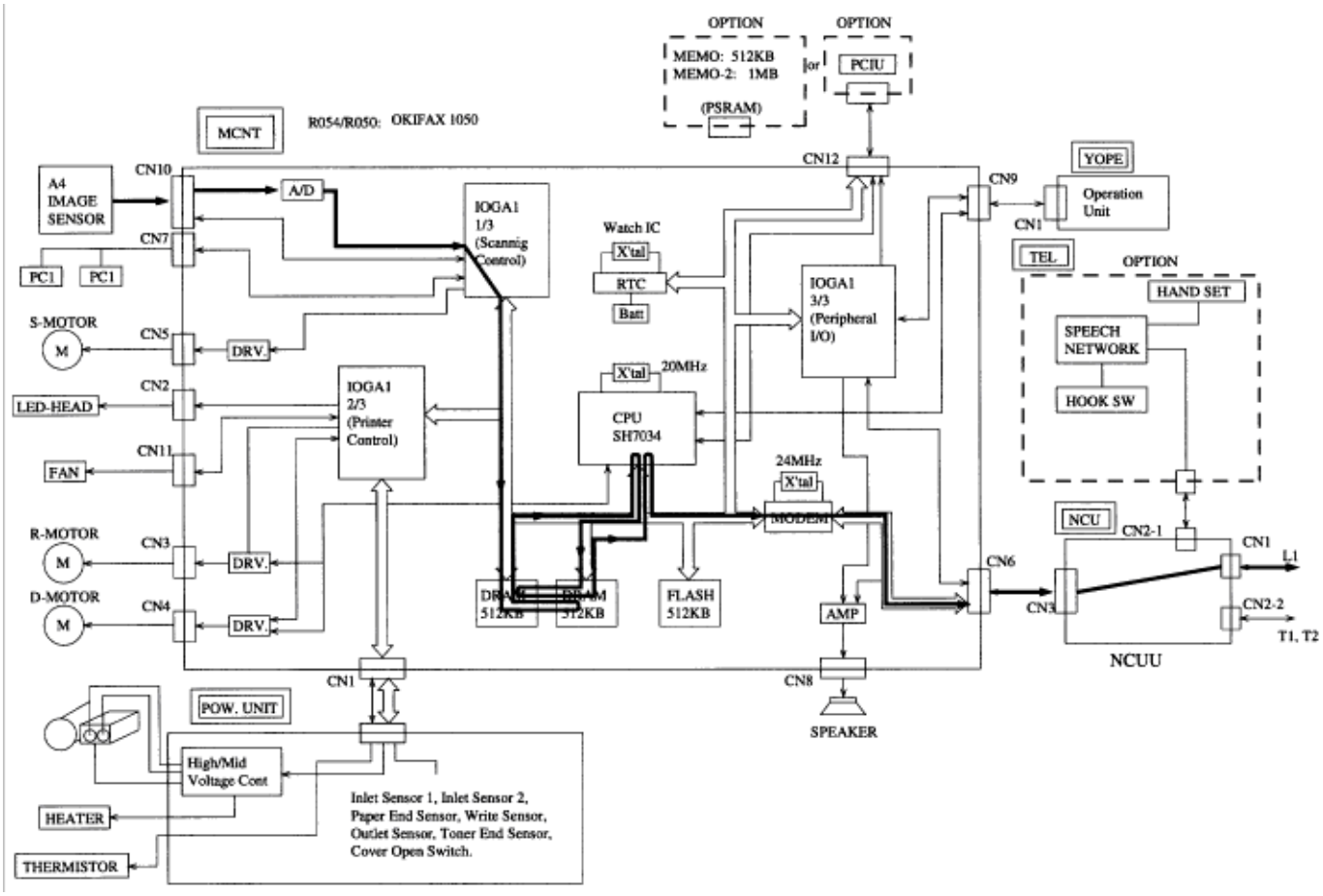

Copyright 1997, Okidata, Division of OKI America, Inc. All rights reserved. See the OKIDATA Business Partner Exchange (BPX) for any updates to this material. (http://bpx.okidata.com)

Okifax 1050 G3 Receive Picture Signal

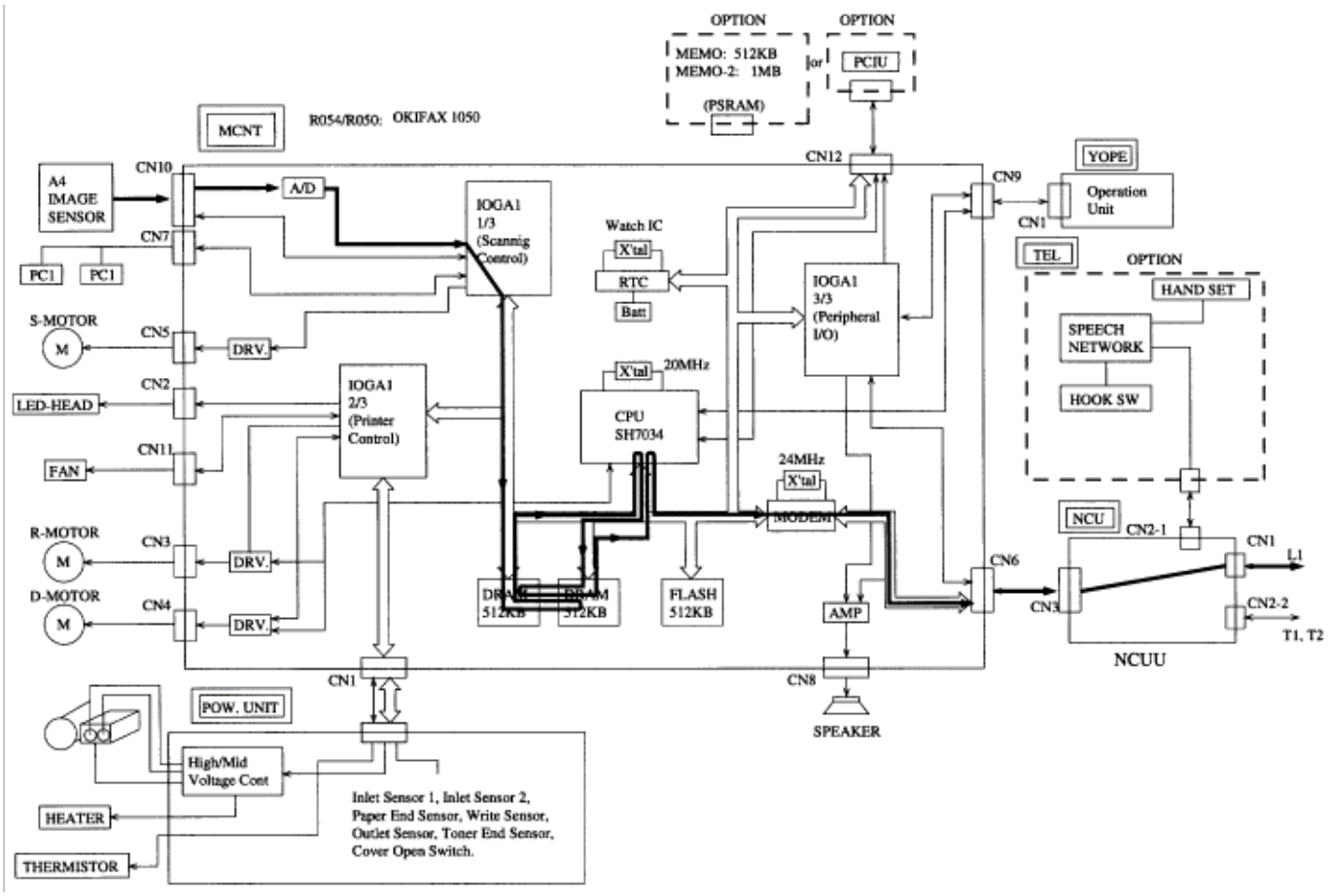

Copyright 1997, Okidata, Division of OKI America, Inc. All rights reserved. See the OKIDATA Business Partner Exchange (BPX) for any updates to this material. (http://bpx.okidata.com)

Okifax 1050 Report Print Signal

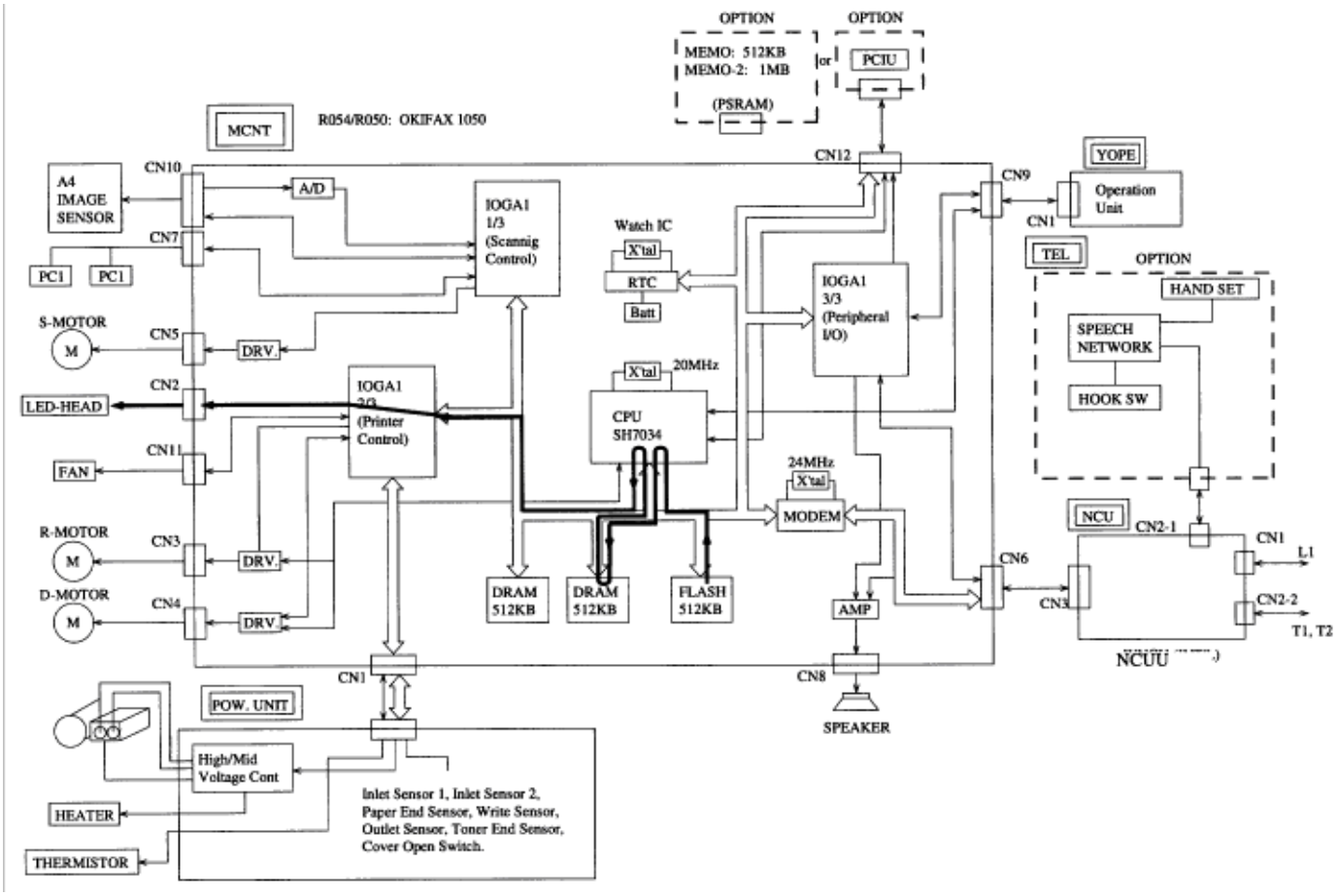

Copyright 1997, Okidata, Division of OKI America, Inc. All rights reserved. See the OKIDATA Business Partner Exchange (BPX) for any updates to this material. (http://bpx.okidata.com)

3.8 Signal Flow by Mode of Operation (OKIFAX 2350/2450)

3.8.01 Copy picture signal Figure 3.8.1 shows the picture signal route in local copy mode.

3.8.02 300 bps send signal Figure 3.8.2 shows the 300 bps send protocol signal route.

3.8.03 300 bps receive signal Figure 3.8.3 shows the 300 bps receive protocol signal route.

3.8.04 G3 send picture signal Figure 3.8.4 shows the G3 send picture signal route.

3.8.05 G3 receive picture signal Figure 3.8.5 shows the G3 receive picture signal route.

3.8.06 Report print signal Figure 3.8.6 shows the report print signal route.

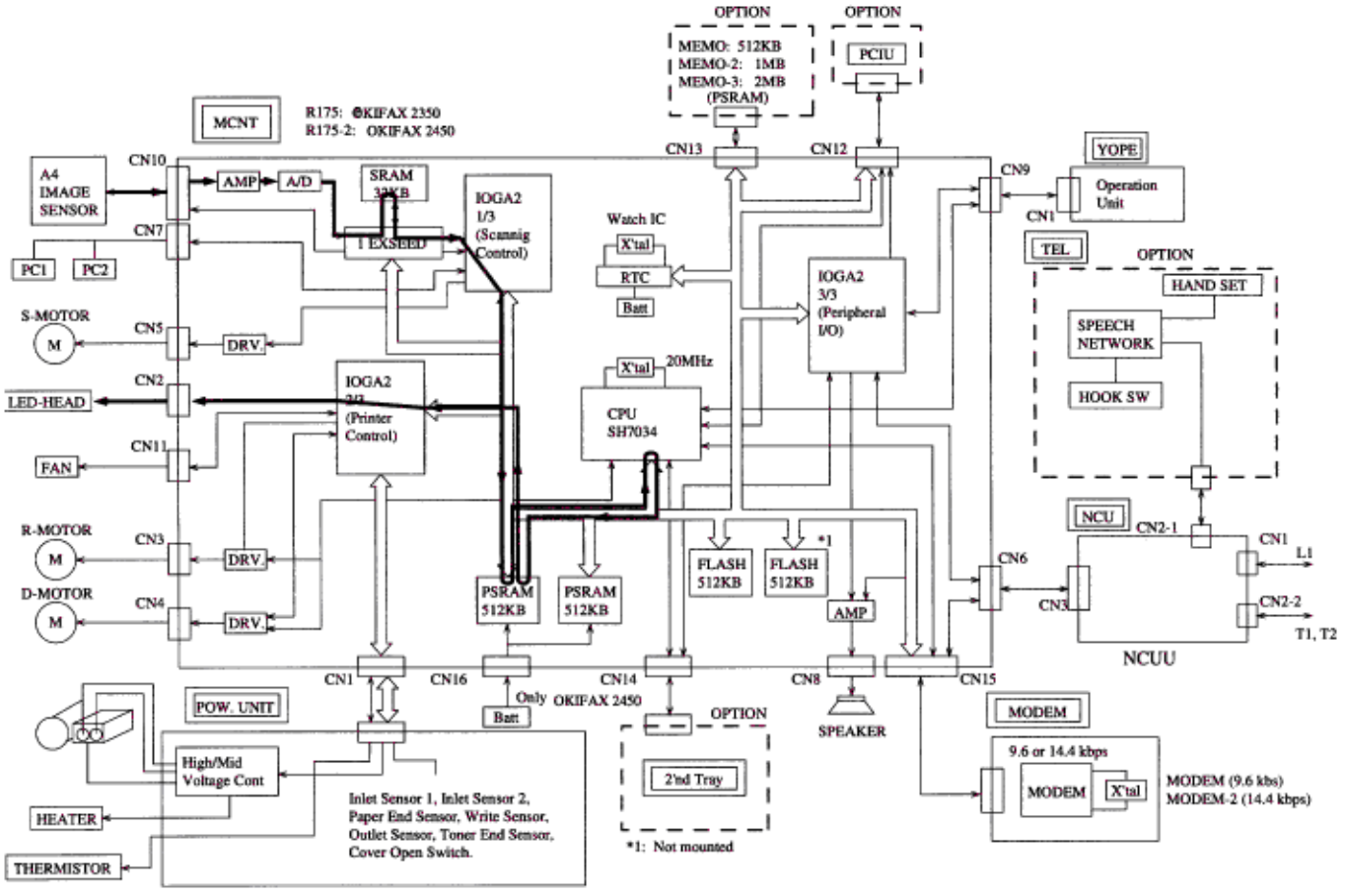

Copyright 1997, Okidata, Division of OKI America, Inc. All rights reserved. See the OKIDATA Business

Partner Exchange (BPX) for any updates to this material. (http://bpx.okidata.com)

Okifax 2350/2450 300 bps Send

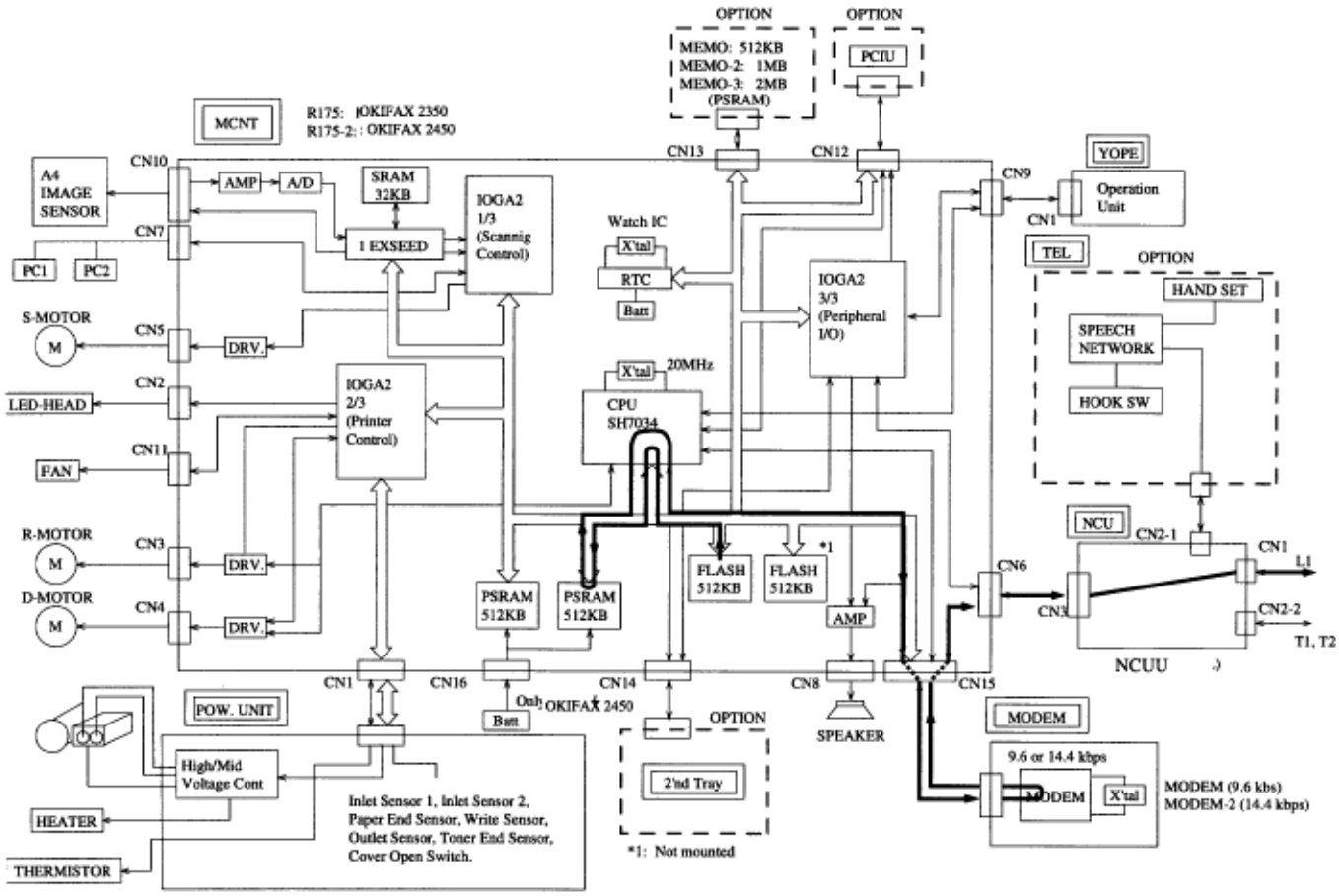

Copyright 1997, Okidata, Division of OKI America, Inc. All rights reserved. See the OKIDATA Business Partner Exchange (BPX) for any updates to this material. (http://bpx.okidata.com)

Okifax 2350/2450 300 bps Receive Signal

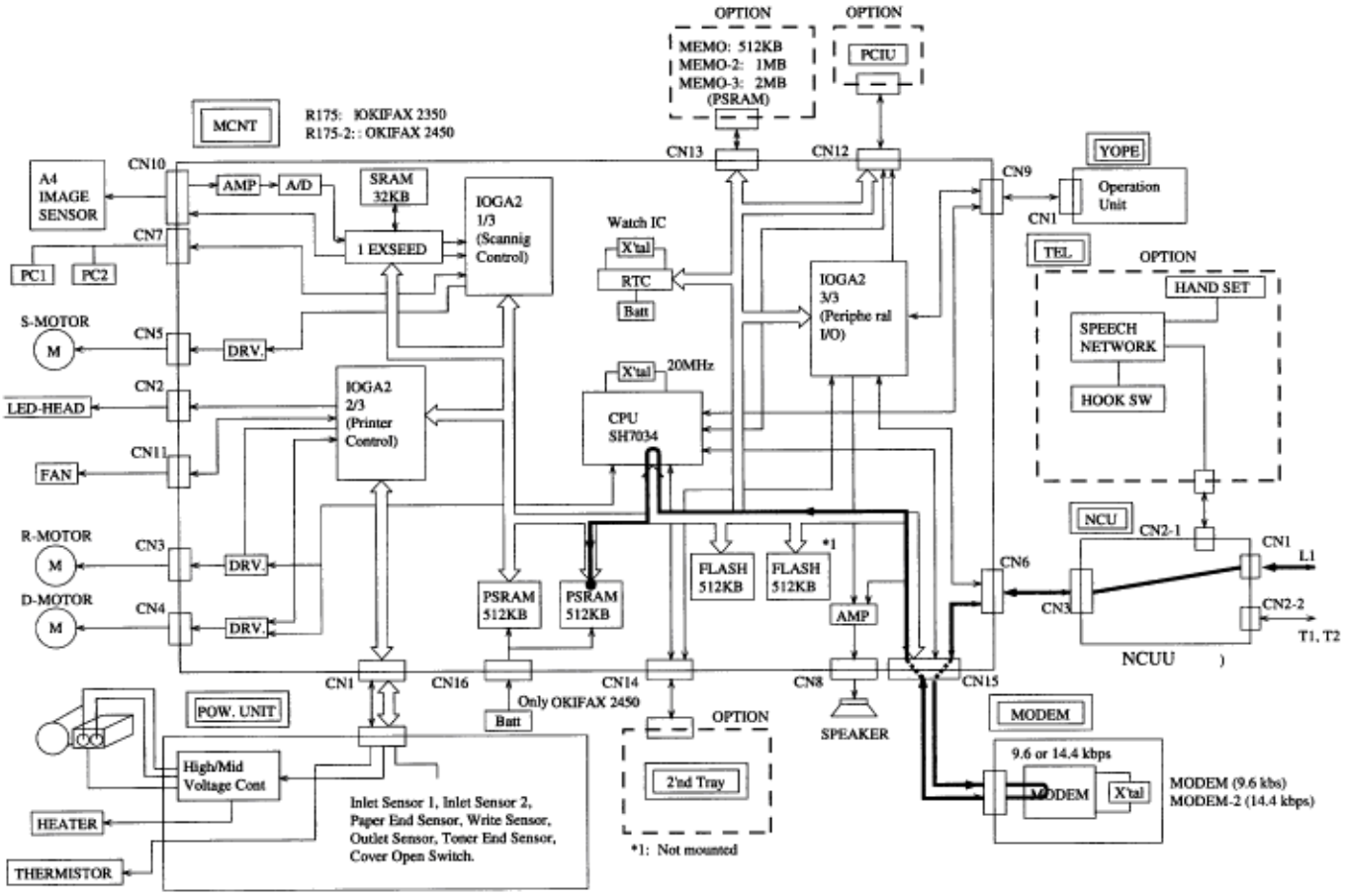

Copyright 1997, Okidata, Division of OKI America, Inc. All rights reserved. See the OKIDATA Business Partner Exchange (BPX) for any updates to this material. (http://bpx.okidata.com)

Okifax 2350/2450 G3 Send Picture Signal

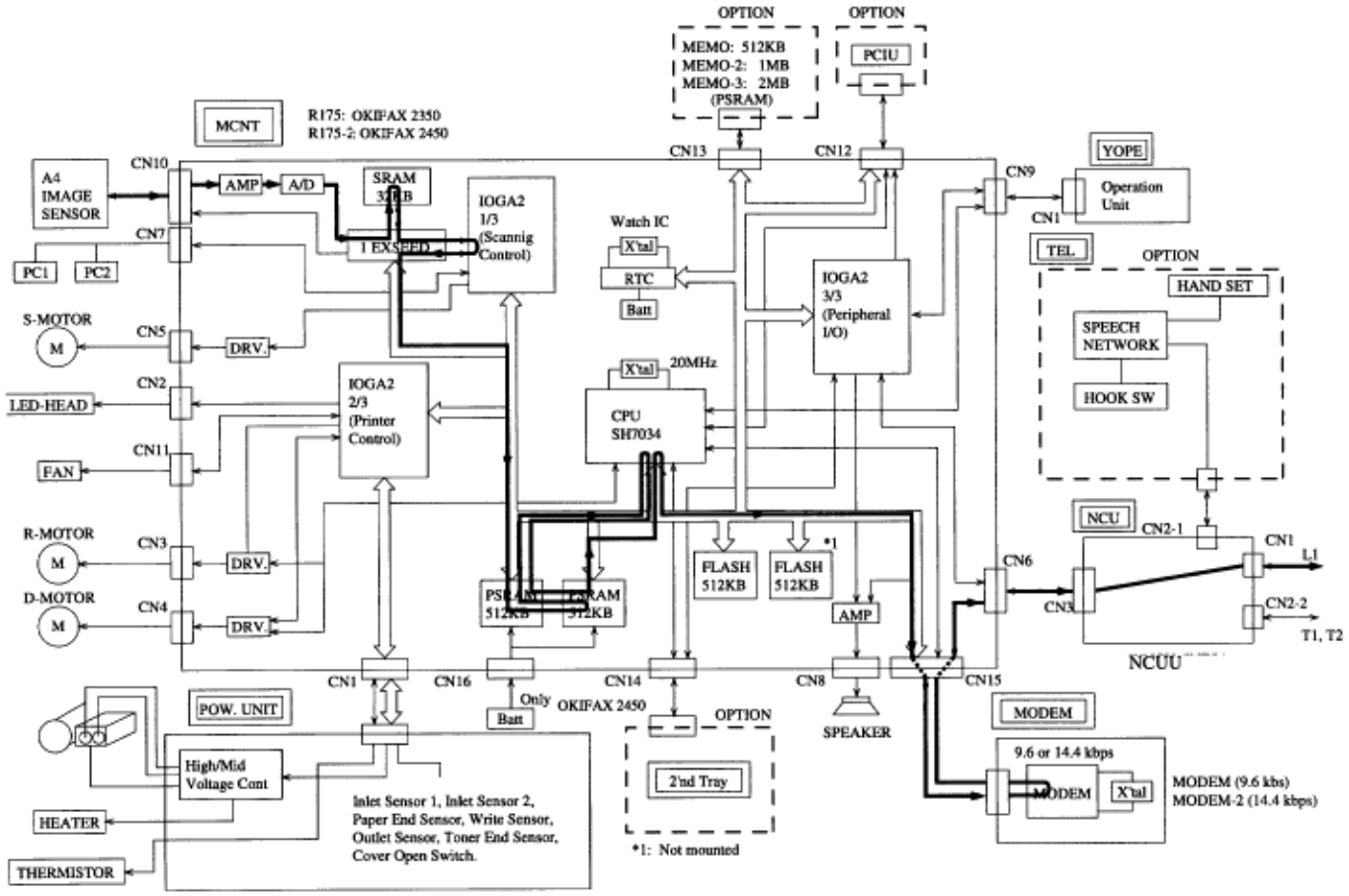

Copyright 1997, Okidata, Division of OKI America, Inc. All rights reserved. See the OKIDATA Business Partner Exchange (BPX) for any updates to this material. (http://bpx.okidata.com)

Okifax 2350/2450 G3 Receive Picture Signal

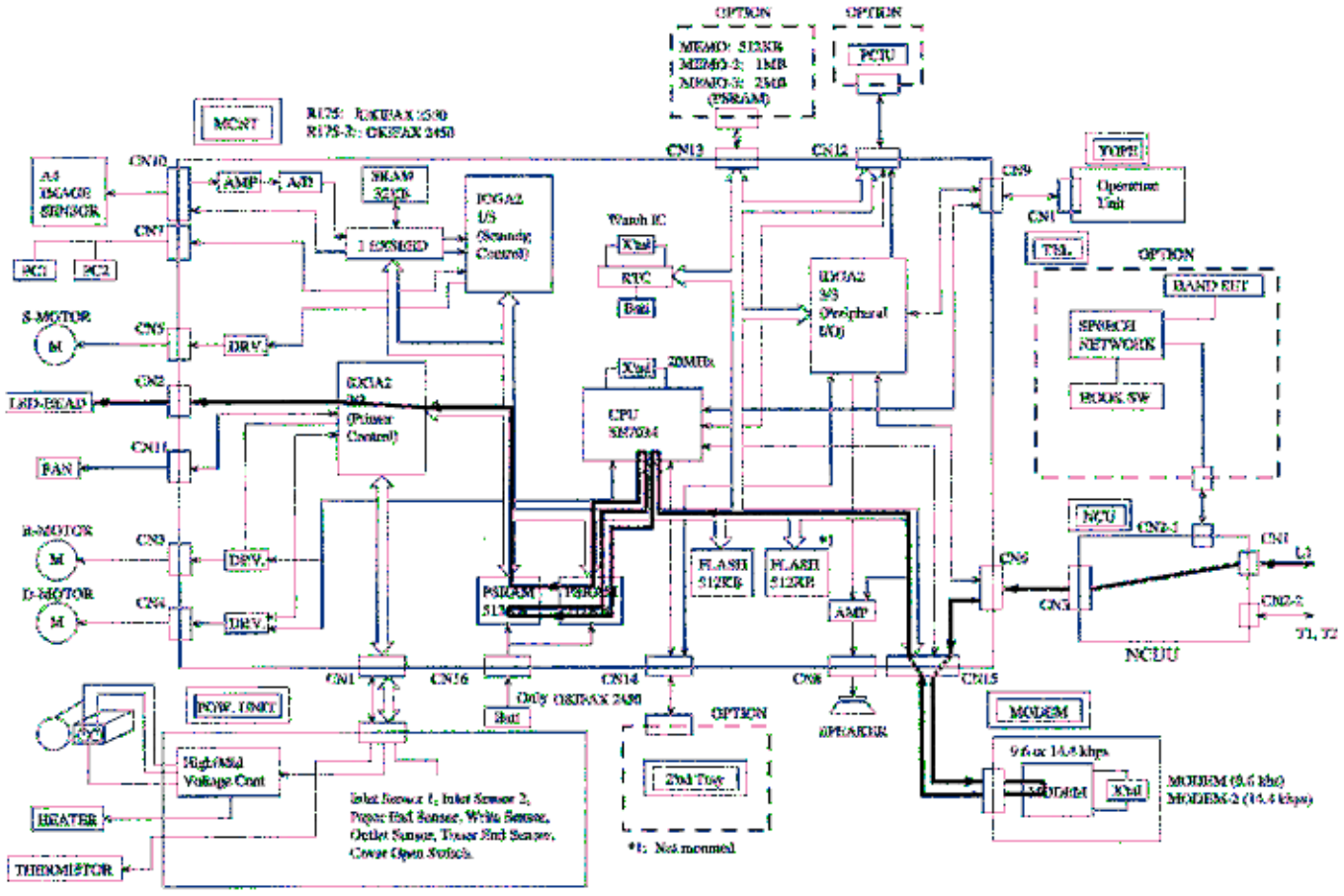

Copyright 1997, Okidata, Division of OKI America, Inc. All rights reserved. See the OKIDATA Business Partner Exchange (BPX) for any updates to this material. (http://bpx.okidata.com)

Okifax 2350/2450 Report Print Signal

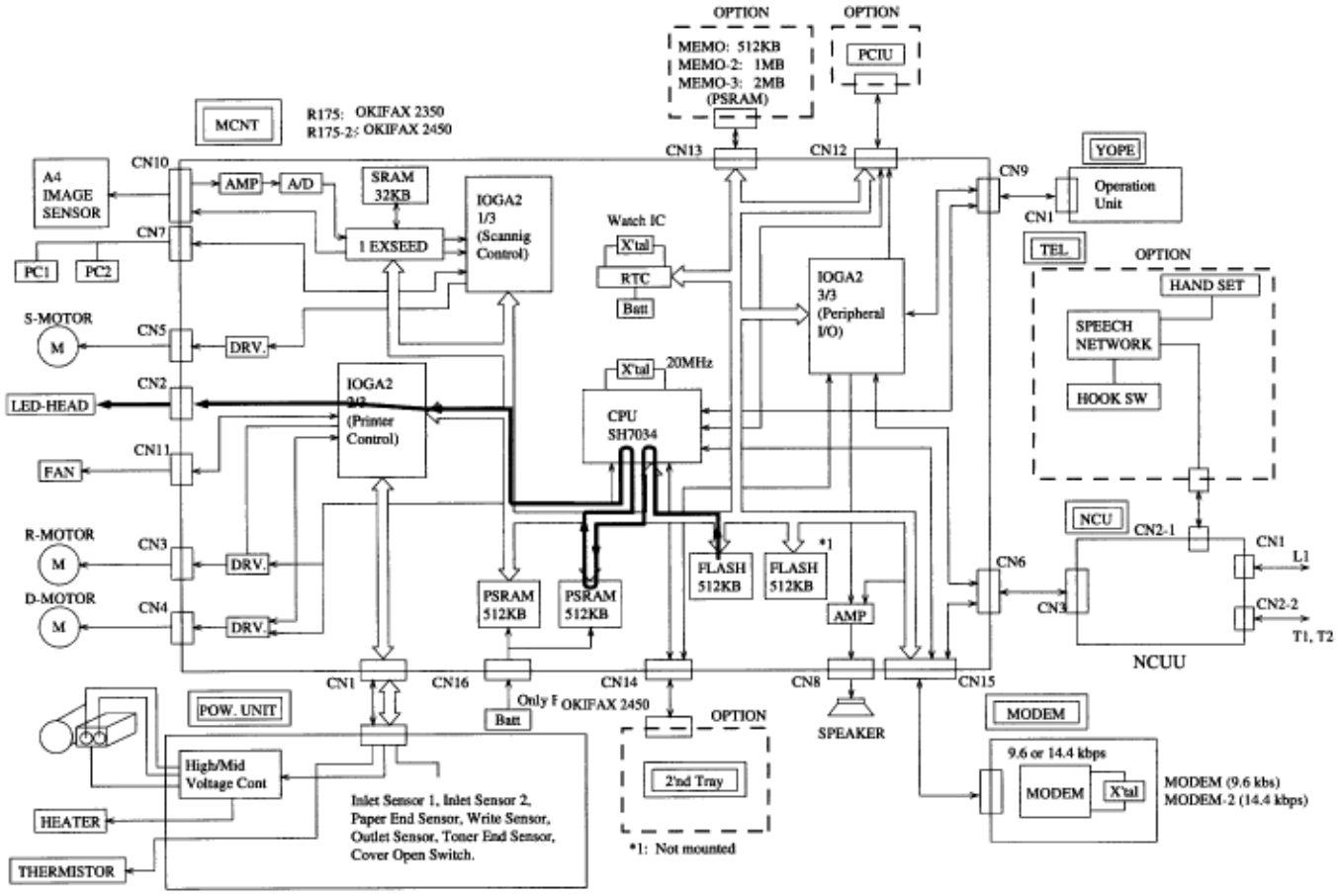

Copyright 1997, Okidata, Division of OKI America, Inc. All rights reserved. See the OKIDATA Business Partner Exchange (BPX) for any updates to this material. (http://bpx.okidata.com)

3.9 Power Supply Unit

3.9.01 FXVE (for 120 V)/FXVH (for 230 V) Circuit Diagram (1/2)

IMPORTANT: Okidata recommends that maintenance of the Power supply unit (FXVE/FXVH board) be performed by replacement of a unit, not by replacement of components.

Therefore,
- circuit descriptions in this section are for reference.
- orders for components of the power supply unit cannot be accepted.

Functions of unit:

FXVE/FXVH circuit generates the following direct currents (DC) based on the alternating current, AC 120 V +6%, -15%
AC 230 V +15%, -14%

1. Low-voltage power supply circuit

This circuit generates the following voltages.

Output Voltage	Output Voltage
+5 V	Logic circuit supply voltage (IC, LSI), and high-voltage source voltage
+8 V	Charging circuit for OKIFAX 2450 Image Data battery backup
+5 V	CIS (contact image sensor)
+5 V	Send motor, drum motor, resist motor, fan drive, flash memory, CIS, and second tray voltage

2. Input ratings
Voltage: AC 120 V+6%, -15% (AC 102 V to 127 V)
AC 230 V+15%, -14% (AC 198 V to 264 V)

Frequency: 50 Hz/60 Hz +/-2%

3. Output ratings

Transformer type A (OKIFAX 1050)

Pin No.	Rated Voltage	Rated Current	Current Range	Voltage Range	Output Ripple	Output Noise

CN3-11, 12 CN3-28	+5 V	1.8 A	0.2 to 4.5 A	5 V ± 4%	100 mVP-P	250 mVP-P
CN3-4, 32	+30 V	0.95 A	0 to 0.95 A	-	4.0 VP-P	-
CN3-30	+8 V	0.1 A	0 to 0.1 A	6.5 to 15 V	3.0 VP-P	3.6 VP-P
CN3-28	-8 V	0.1 A	0 to 0.1 A	-15 to 6.5 V	3.0 VP-P	3.6 VP-P

Transformer type B(OKIFAX 2350/2450)

Pin No.	Rated Voltage	Rated Current	Current Range	Voltage Range	Output Ripple	Output Noise
CN3-11, 12 CN3-26	+5 V	1.8 A	0.2 to 4.5 A	5 V ± 4%	100 mVP-P	250 mVP-P
CN3-4, 32	+30 V	1.20 A	0 to 1.20 A	-	4.0 VP-P	-
CN3-30	+8 V	0.1 A	0 to 0.1 A	6.5 to 15 V	3.0 VP-P	3.6 VP-P
CN3-28	-8 V	0.1 A	0 to 0.1 A	-15 to 6.5 V	3.0 VP-P	3.6 VP-P

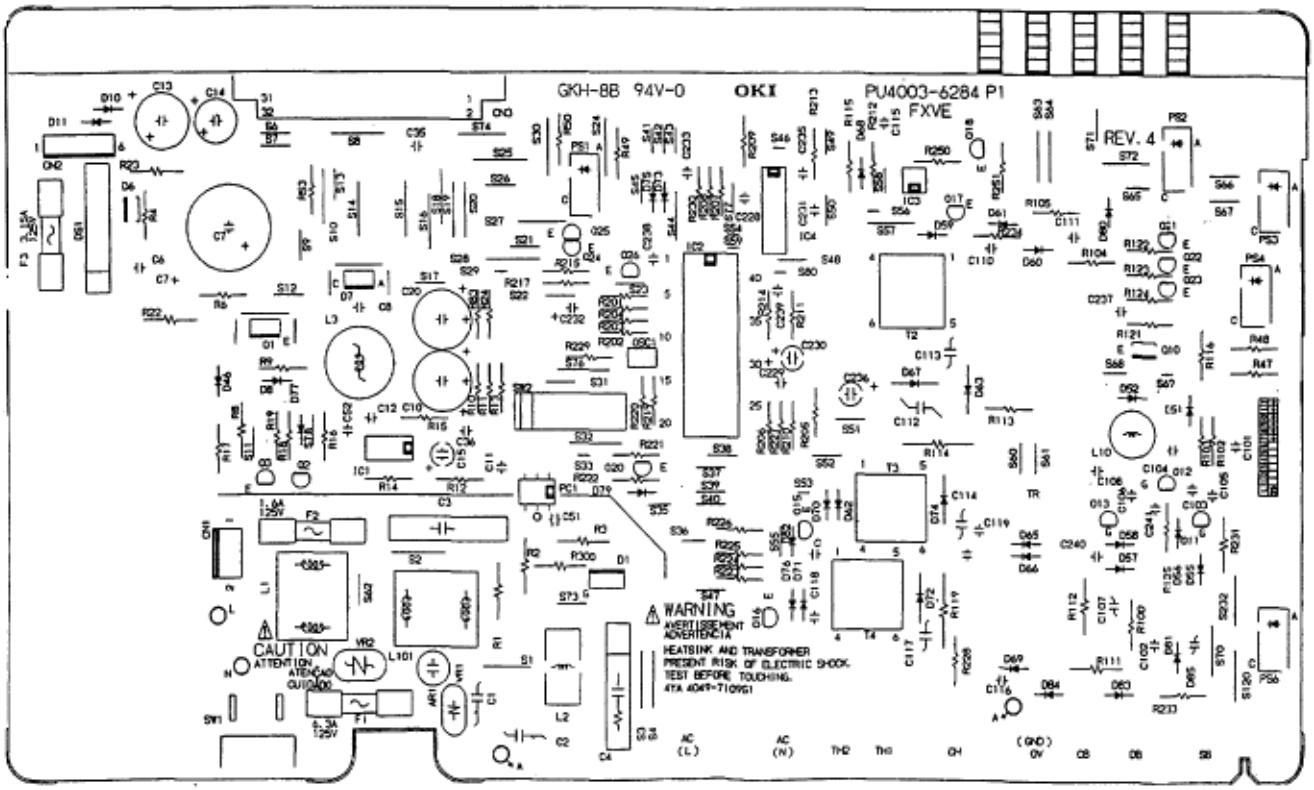

Copyright 1997, Okidata, Division of OKI America, Inc. All rights reserved. See the OKIDATA Business Partner Exchange (BPX) for any updates to this material. (http://bpx.okidata.com)

General functional description

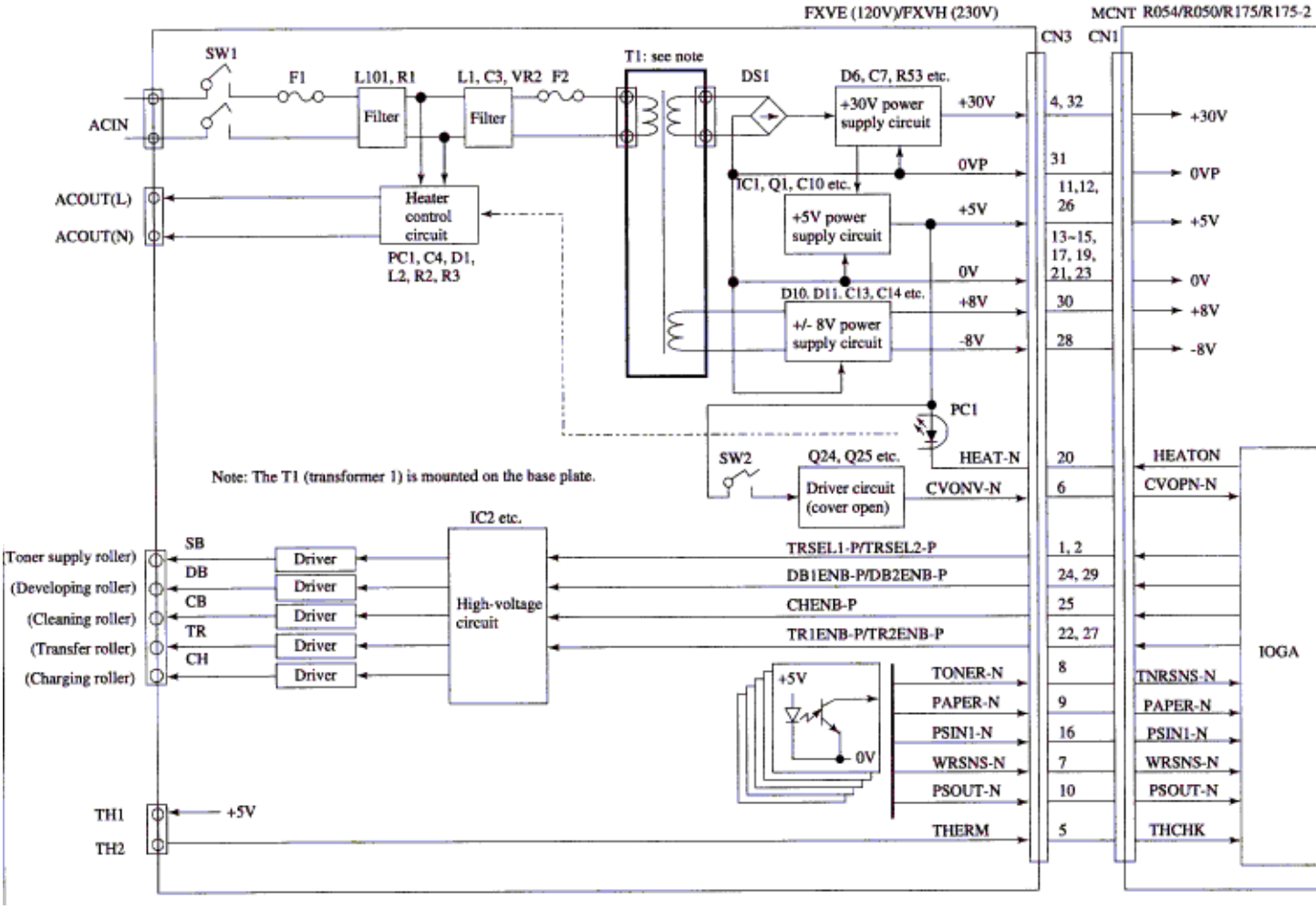

Copyright 1997, Okidata, Division of OKI America, Inc. All rights reserved. See the OKIDATA Business Partner Exchange (BPX) for any updates to this material. (http://bpx.okidata.com)

3.9.02 Power Supply Unit (FXVE/FXVH)

General functional description

1. General

The power supply unit consists mainly of an AC transformer and a power PCB (FXVE board for AC120V/FXVH board for AC230V). A block diagram of the power supply unit is shown in Figure A3.XX. The power PCB is composed of five main circuits: AC input section, heater control section, low-voltage section, high-voltage section and protection circuit.

The low-voltage section provides a +5V output by a DC-DC converter and other output voltages (+30V, +8V and -8V) simply by rectifying and smoothing the respective outputs of the AC trans-former. The high-voltage section (TR1, TR2, DB1, DB2, SB2, CB and CH) produces a flyback voltage from 5V by using a drum coil and a high-voltage transformer.

2. Circuit description

- AC input section

AC commercial power is supplied to line filter circuit through the AC inlet, power switch (SW1) and the fuse (F1). Fuse F1 is used for protecting the heater circuit.
Fuse F2 is used to protect the secondary circuit from overvoltage from the AC input line. This fuse F2 is not mounted in the power supply unit for 230VAC input.

- Heater control circuit

The on/off operation of the heater is controlled by the operation of photocoupler PC1 whose operation is controlled by the HEAT-N signal applied to CN3-20 pin from the control PCB (R054R050/R175/R175-2 board).

3. Low-voltage section

- +30 V circuit

This circuit provides +30 V output by rectifying the corresponding output of transformer T1 and smoothing the rectified signal by capacitor C7.

- +/- 8 V circuit

This circuit provides +8 V and -8 V outputs by rectifying the corresponding output of transformer T1, smoothing the rectified signals by capacitors C13 and C14.

- +5 V circuit

This circuit provides +5 V output using output by means of DC-DC converter circuit.

4. Protection circuits

The protection circuit includes fuse F3 for +30 V and +5 V for overcurrent protection.

If an overvoltage is applied to the +5 V circuit, fuse F3 will blow.

F1 will blow only in the event of AC line shortcircuit.

5. Cover open circuit

The cover open circuit consists of SW2, Q24 and Q25. When the stacker cover is opened, the cover open microswitch (SW2) on the FXVE/FXVH board is turned off to cut the supply of 5V to the high-voltage power supply circuit. As a result all high-voltage outputs are interrupted. At the same time, a signal is sent to the control board to notify it the off state of the microswitch, and the control board performs the cover open processing, and display message.

6.. High-voltage section

Functional overview

The high-voltage outputs consist of TR1 (1 kV), TR2 (-0.75 kV), DB1 (+300 V), DB2 (-300 V), SB2 (-450V), CB (+400 V) and CH (-1.35 kV) and are obtained as follows. The control signal obtained from connector CN3 is applied to power control IC2. As result, the driver current from this IC2 is applied to the drive circuit, which will provide the high-voltage outputs.

Note:

Signal Name	Output Voltage	Application
SB1/SB2	0±5 V/-450 V	Voltage applied to toner supply roller.
DB1/DB2	+300 V/-300 V	Voltage applied to developing roller.
TR1/TR2	+1 kV/-0.75 kV	Voltage applied to transfer roller.
CH	-1.35 kV	Voltage applied to charging roller.
CB	+400 V	Voltage applied to cleaning roller.

Copyright 1997, Okidata, Division of OKI America, Inc. All rights reserved. See the OKIDATA Business Partner Exchange (BPX) for any updates to this material. (http://bpx.okidata.com)

3.9.03 FXVE (for 120 V)/FXVH (for 230 V) Circuit Diagram (2/2)

This circuit consists of power control IC2, photo-sensors and high voltage generation unit.

DANGER:

3.9.03 FXVE (for 120 V)/FXVH (for 230 V) Circuit Diagram (2/2)

This circuit consists of power control IC2, photo-sensors and high voltage generation unit.

3.9.03 FXVE (for 120 V)/FXVH (for 230 V) Circuit Diagram (2/2)

This circuit consists of power control IC2, photo-sensors and high voltage generation unit.

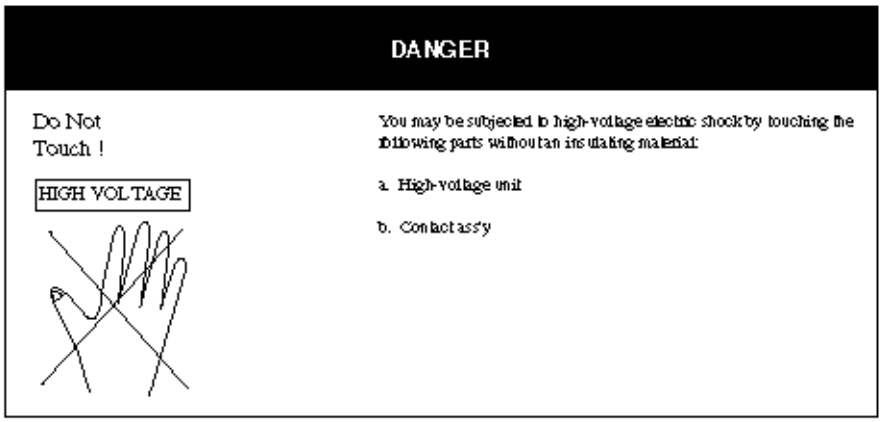

High voltage outputs are connected to the contact assy as shown below:

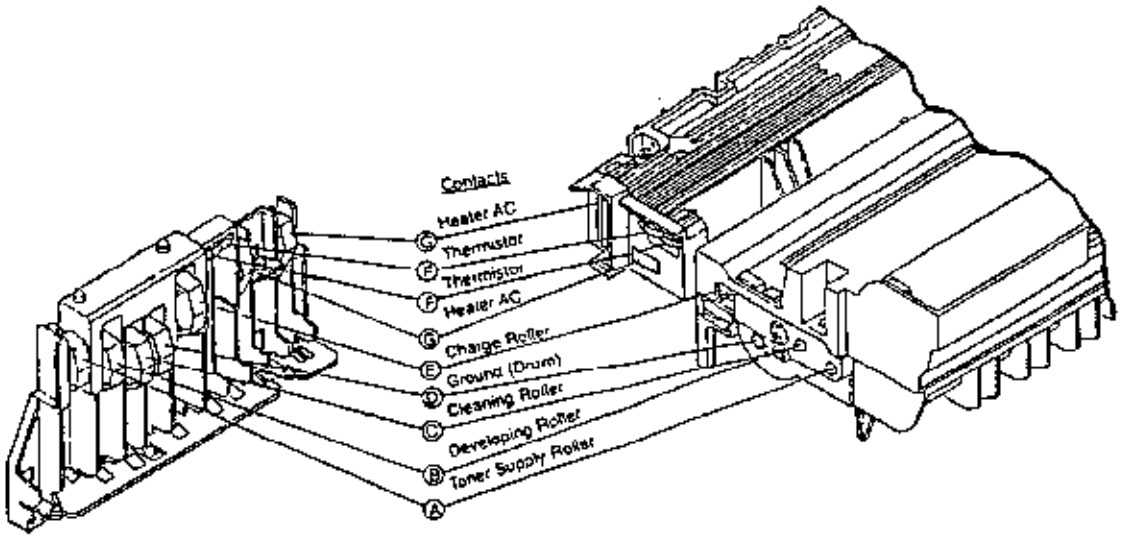

:

Copyright 1997, Okidata, Division of OKI America, Inc. All rights reserved. See the OKIDATA Business Partner Exchange (BPX) for any updates to this material. (http://bpx.okidata.com)

3.10 NCU Board

Explanation of NCU circuit diagram

This section briefly describes functional blocks of the NCU circuit diagram.

NCUU circuit diagram

- Receiving Sensitivity

The receiving sensitivity is determined by the operational amplifier IC2.

- Transmission Level

The transmission level is determined by operational amplifier IC2 and peripheral resistors and capacitors.

- Ring Detection

The AC ring signal is converted to the secondary low voltage signal by photocoupler IC3, and output to the MCNT as signal RI. This notifies the MCNT that a call is incoming.

- Off Hook Detection

The OFF HOOK signal is converted to the secondary, low voltage signal by photocoupler IC1, and output to the MCNT as signal HUP1. This notifies the MCNT that the phone line is off hook.

- Relay Driver Circuit

CML (RL1 and RL4 relay) signal Relays RL1 and RL4 switch the line from telephone side to facsimile side.

DP (RL2 relay) signal

Relay RL2 generates dial pulses when calling a remote machine by auto-dialing under the control of DP signal on/off from output port (IOGA).

SR (RL3 relay) signal

Relay RL3 is used to detect hook-up of external telephone set.

- Telephone Interface

Connectors CN1 and CN2 are used to provide an interface between the fax and telephone line.

Internal telephone set (optional) is connected across terminals of TEL1-L1 or TEL1-L2 by an RJ11-C modular jack.

External telephone set is connected across terminals of TEL2-L1 or TEL2-L2 by an RJ11-C modular jack.

Telephone exchange is connected across terminals LINE-L1 and LINE-L2 by an RJ11-C modular jack.

NCUU Package Layout (OKIFAX 1050/2350/2450)

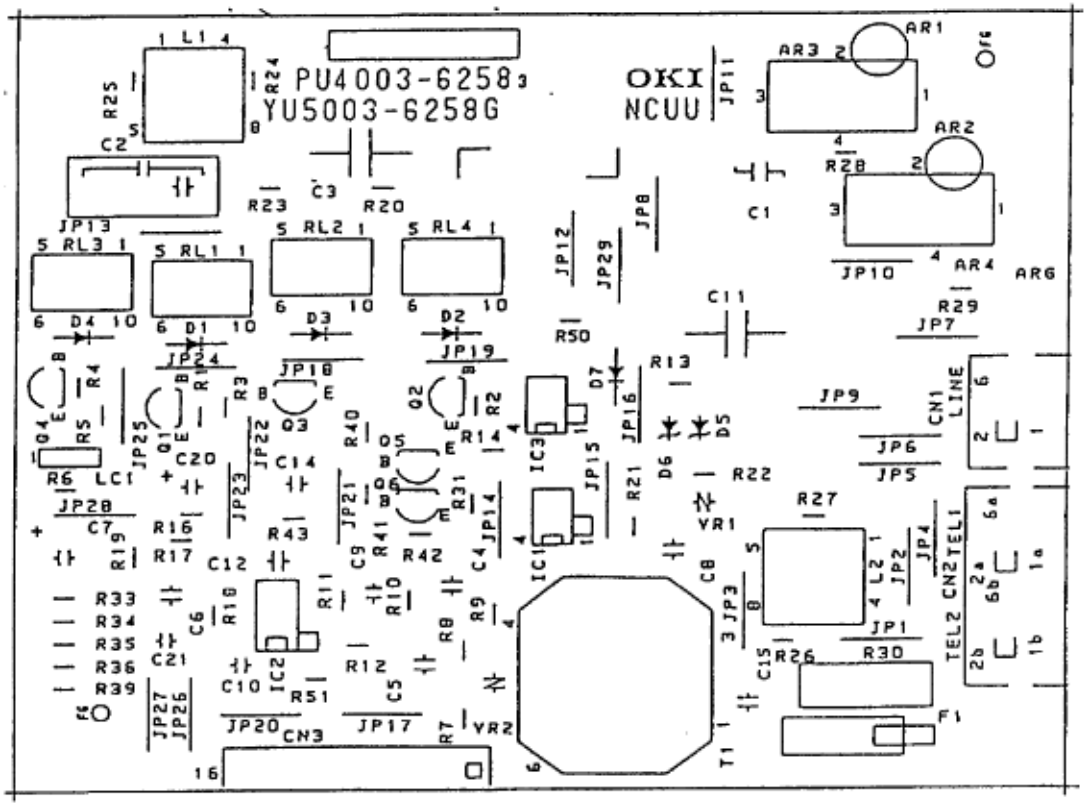

Figure 3.10.1 Block Diagram of NCUU

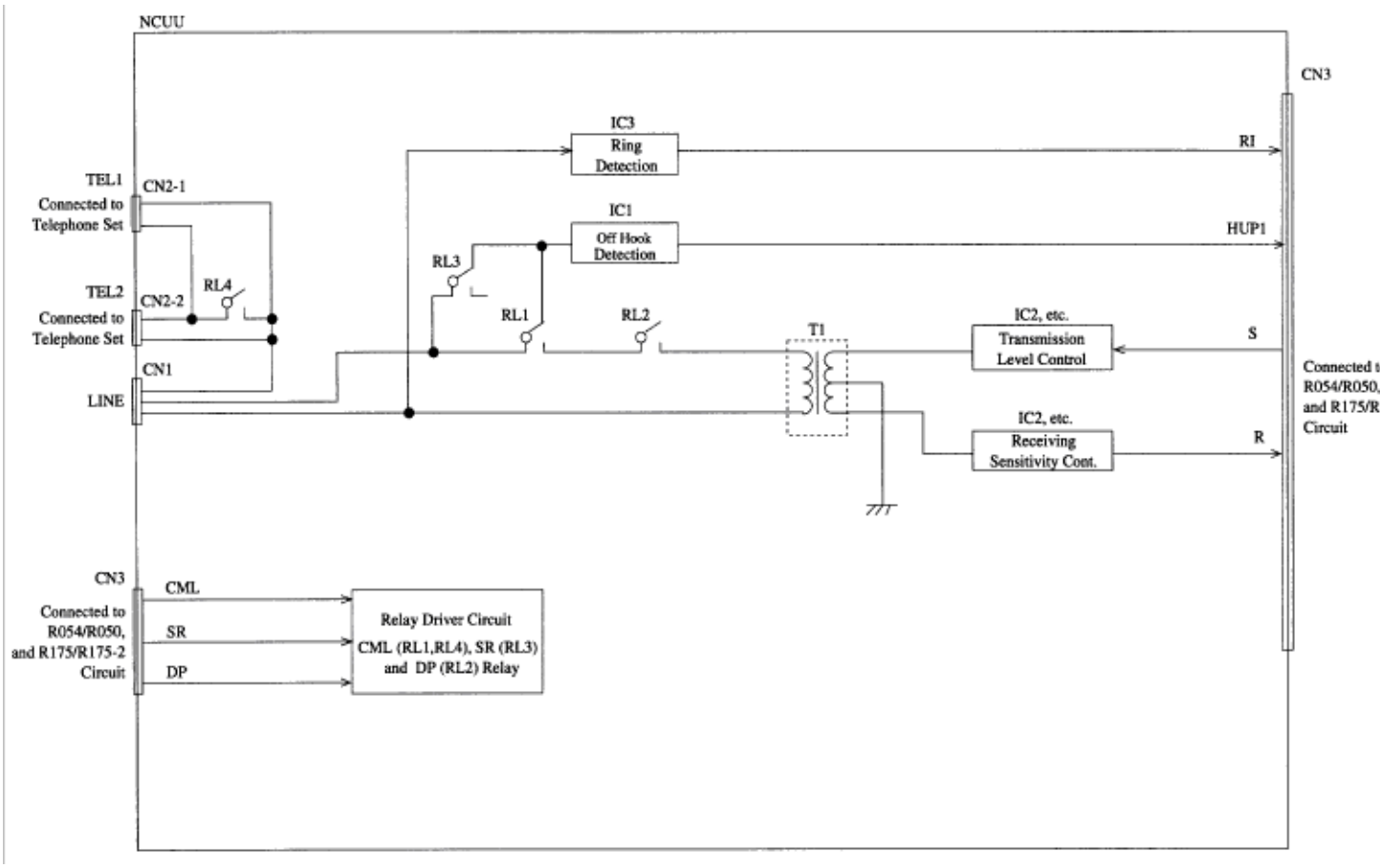

Copyright 1997, Okidata, Division of OKI America, Inc. All rights reserved. See the OKIDATA Business Partner Exchange (BPX) for any updates to this material. (http://bpx.okidata.com)

3.11 TELU Circuit Diagram (option)

TEL board is used as the interface board of the optional telephone assembly, when it is installed on the facsimile transceiver.

Block diagram

Figure 3.11.1 Block Diagram of TEL-U

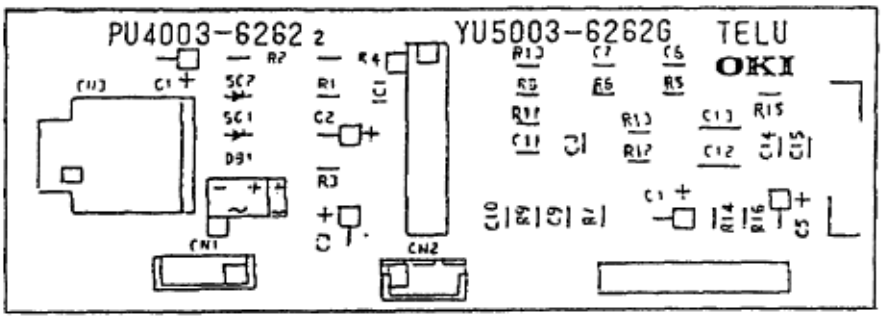

Figure 3.11.1 Block Diagram of TEL-U

Copyright 1997, Okidata, Division of OKI America, Inc. All rights reserved. See the OKIDATA Business Partner Exchange (BPX) for any updates to this material. (http://bpx.okidata.com)

Block Diagram of TEL-U (option)

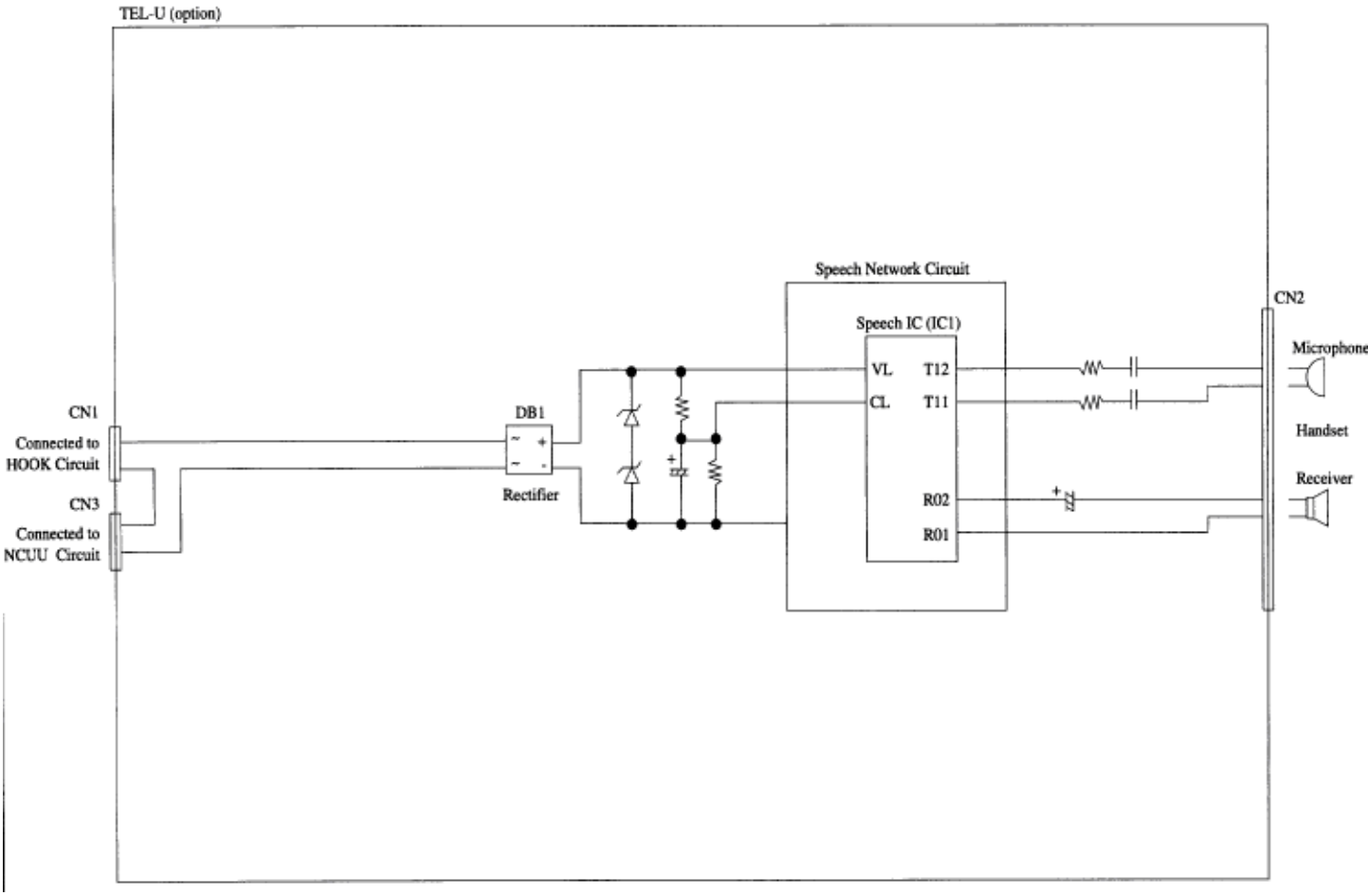

Copyright 1997, Okidata, Division of OKI America, Inc. All rights reserved. See the OKIDATA Business Partner Exchange (BPX) for any updates to this material. (http://bpx.okidata.com)

Relationship between NCUU and TEL-U

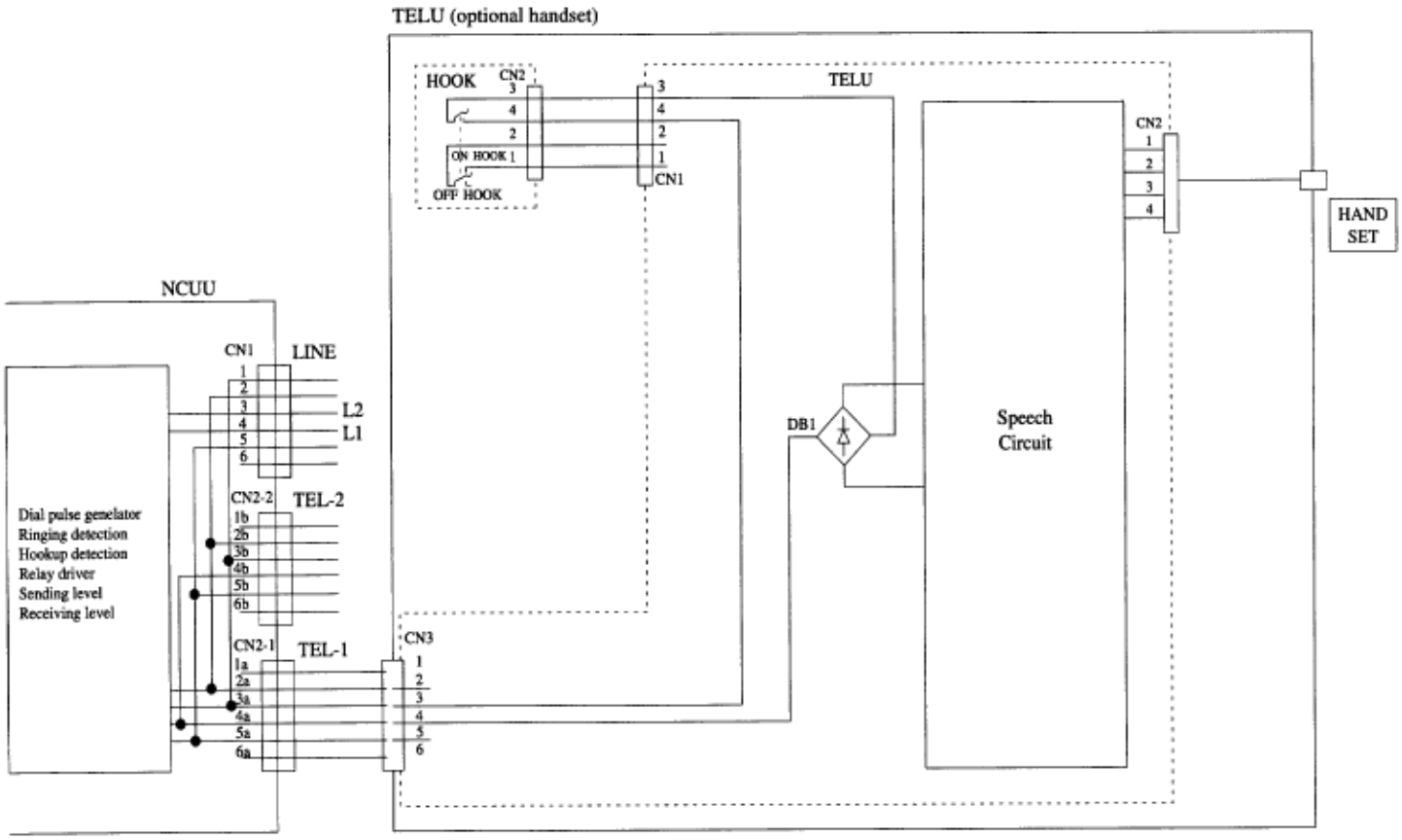

Copyright 1997, Okidata, Division of OKI America, Inc. All rights reserved. See the OKIDATA Business Partner Exchange (BPX) for any updates to this material. (http://bpx.okidata.com)

3.12 MEMO (memory) Circuit Diagram (option)

The optional memory board (MEM/MEM-2/MEM-3), is used for expanding the OKIFAX unit's Image (picture) memory..

Block diagram

Figure 3.12.1 shows a related signal of memory board.

MEMO/MEMO-2/MEMO-3 circuit consists of the following block.

1. 512 kbyte pesudo static RAM x 4 (RAM1 to RAM4). Used as follows: Picture memory for the ECM send/receive modes. Picture memory for the memory transmission mode. Picture memory for the retransmission data. Picture memory for the reception in memory

2. Memory capacity

One of 512 kbyte (MEMO) or 1 Mbyte (MEMO-2) memory board can be added for OKIFAX 1050.

One of 512 kbyte (MEMO), 1 Mbyte (MEMO-2) or 2 Mbyte (MEMO-3) memory board can be added for OKIFAX 2350/2450.

The relationship between memory capacity and mounted boards are shown in the following table:

Equipment	Memory Capacity	RAM1	RAM2	RAM3	RAM4	Mounted Board Name
Okifax 1050	OKIFAX	Mounted	Not mounted	Not mounted	Not mounted	MEMO
	1 Mbyte	Mounted	Mounted	Not mounted	Not mounted	MEMO-2
Okifax 2350/2450	512 kbyte	Mounted	Not mounted	Not mounted	Not mounted	MEMO
	1 Mbyte	Mounted	Mounted	Not mounted	Not mounted	MEMO-2
	2 Mbyte	Mounted	Mounted	Mounted	Mounted	MEMO-3

Note: Back-up time on electrical interruption; Min. one hour for OKIFAX 2450. The OKIFAX 1050/2350 does not back-up messages received in memory when power is lost.

3. Image memory capacity

	Memory Condition	OKIFAX 1050 (pages)	OKIFAX 2350 (pages)	OKIFAX 2450 A4 Setting	OKIFAX 2450 LEGAL Setting
With Option Board	Standard (without option)	17	17	35	27
	0.5 Mbyte	56	56	79	70
	1.0 Mbyte	100	100	120	110
	2.0 Mbyte	-	180	200	195

Note: No. of sheets are counted provided that ITU-T No.1 sample document is used. No. of sheets are typical value.

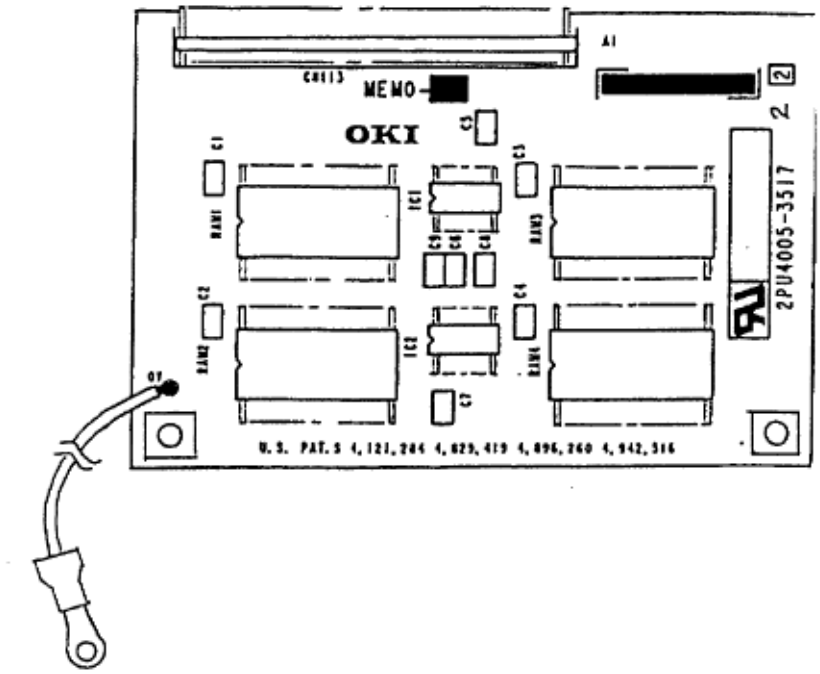

Expanded Memory (Optional) OKIFAX 1050/2350/2450

Copyright 1997, Okidata, Division of OKI America, Inc. All rights reserved. See the OKIDATA Business Partner Exchange (BPX) for any updates to this material. (http://bpx.okidata.com)

3.13 P050 (PC interface unit) Circuit Diagram (option)

P050 board with RS232C (25 pin) is used as an interface between a PC compatible computer and OKIFAX 1050, 2350 or 2450. The OKIFAX connects to a serial port of the PC using an RS-232D cable (supplied with the optional PC Interface Kit).

Note: OKIFAX 1050/2350/2450 applies to EIA class 1 and class 2 as PC interface, although class 1 is used as the default setting.

Block diagram

P050 board circuit is composed of a Receiver, Driver, EPROM and RS232C (25 pin).
Figure 3.13.1 shows related signals of P050 board.

Function

The following four modes are supported:

PC local printer mode
PC scanner mode
PC transmission mode
PC reception mode

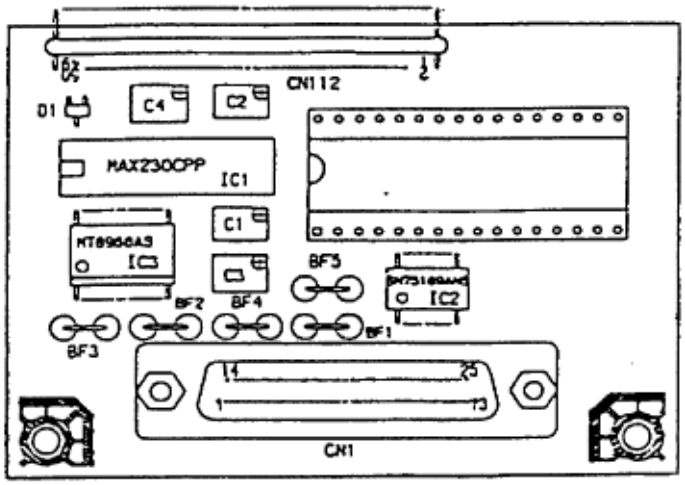

PC Interface PCB (Optional) OKIFAX 1050/2350/2450

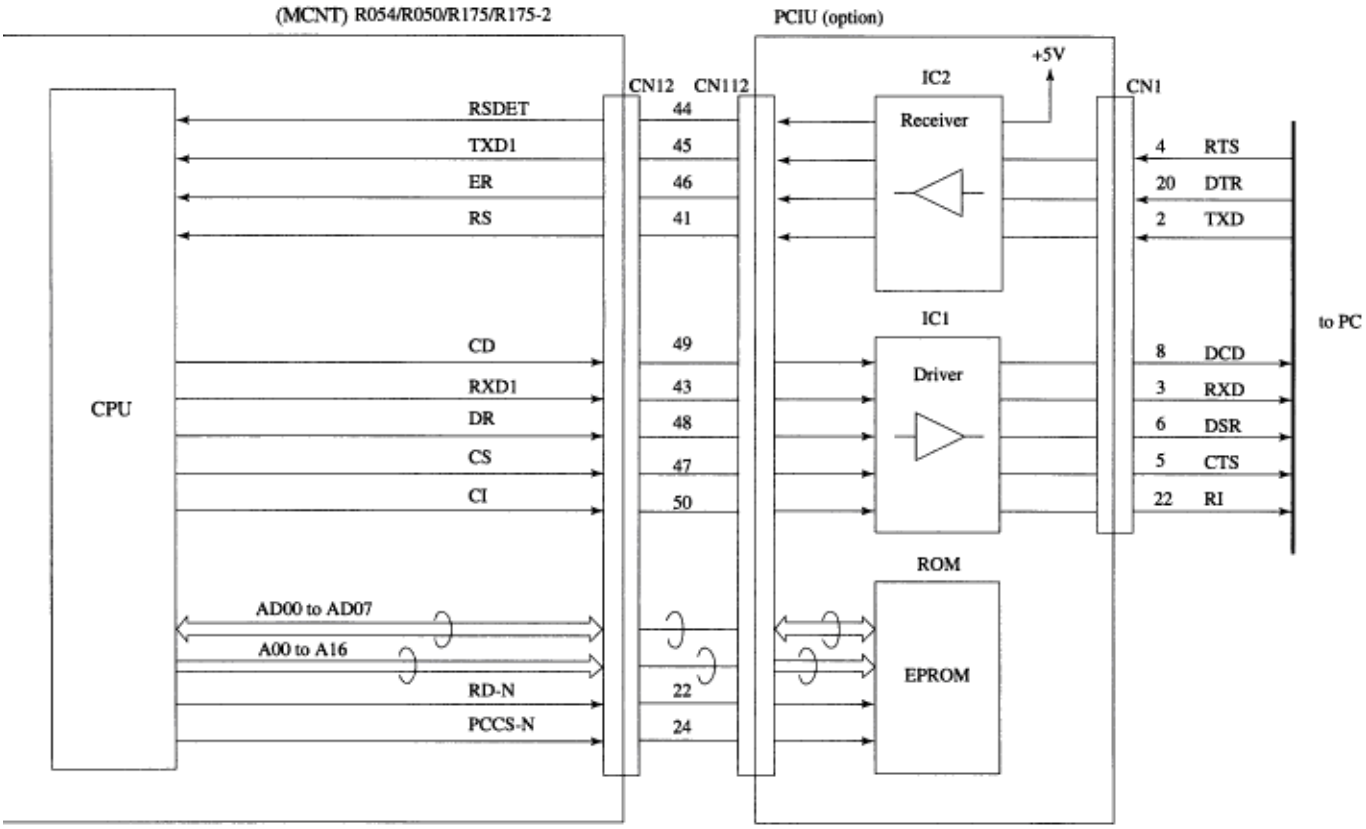

Figure 3.13.1 Block Diagram of P050 (PC interface unit)

Copyright 1997, Okidata, Division of OKI America, Inc. All rights reserved. See the OKIDATA Business Partner Exchange (BPX) for any updates to this material. (http://bpx.okidata.com)

3.14 TQSB (Second tray) Circuit Diagram: option

Block diagram

This board is installed as the optional board for OKIFAX 2350/2450.

Figure 3.14.1 shows a block diagram of the second tray (option).

Function

Second tray consists of the following functions: Paper capacity: 500 sheets Paper size: A4, Letter, Legal Paper-size selection: Automatic Cassette/no-cassette selection: Automatic Paper/no-paper selection: Automatic Paper route open to facsimile transceiver unit: Automatic decision

Control method: When second tray is installed with the facsimile transceiver unit, the tray is connected to the fac-simile transceiver unit by a connecting cable. The tray is controlled by commands from CPU of the MCNT board.

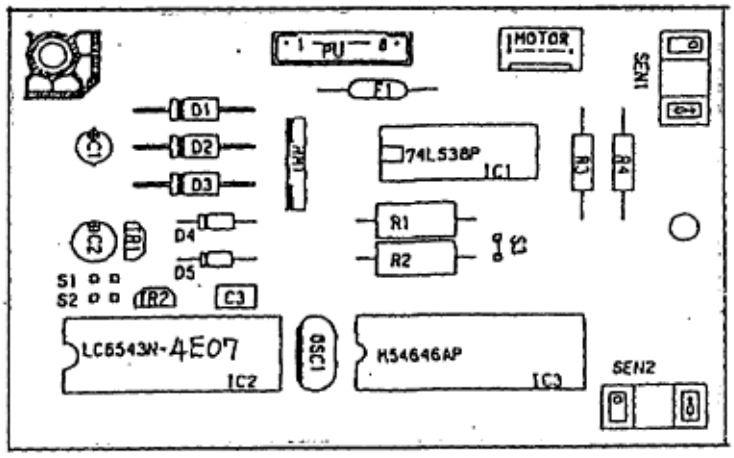

Figure 3.14.1 Block Diagram of the Second Tray (option)

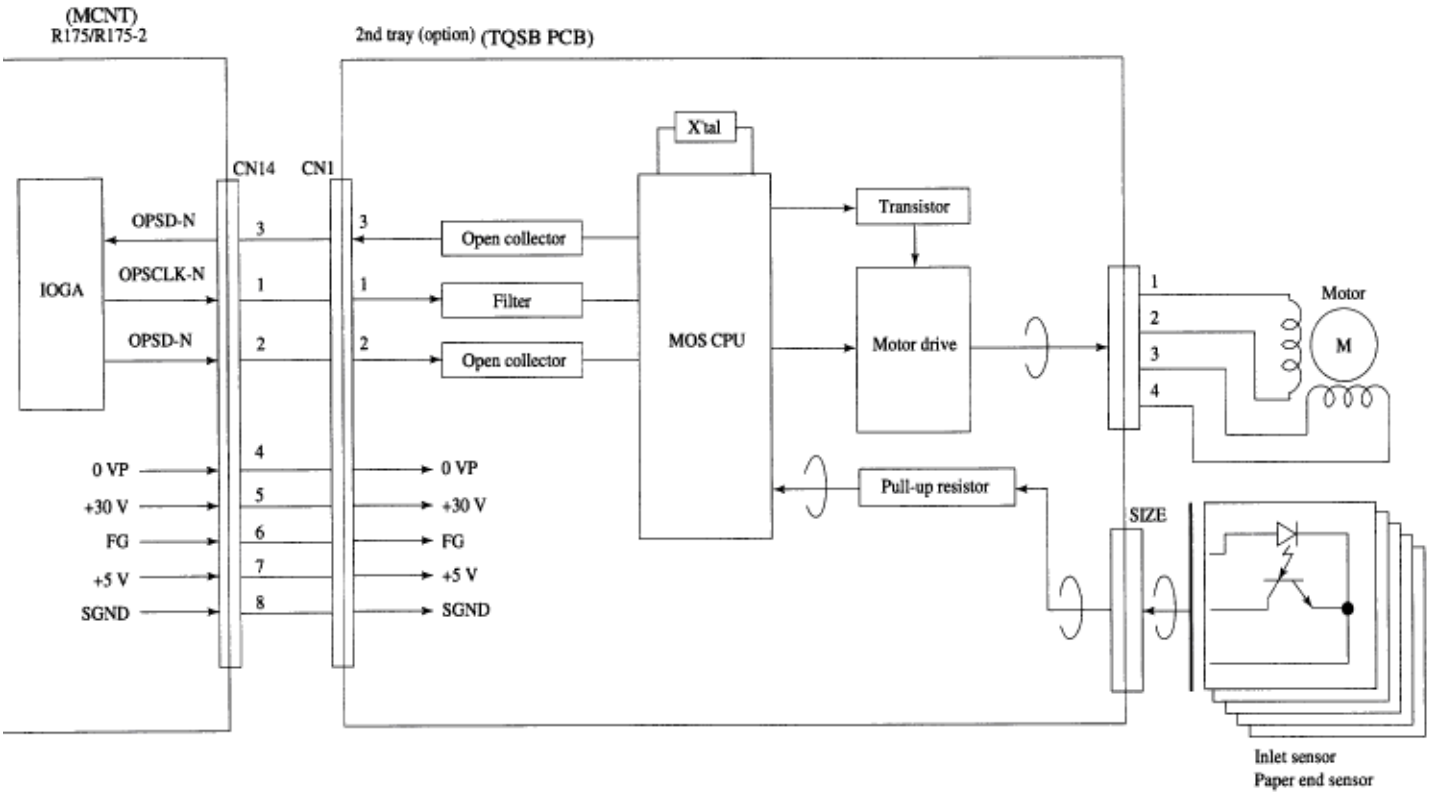

Figure 3.14.1 Block Diagram of 2nd Tray (for OKIFAX 2350/2450)

Copyright 1997, Okidata, Division of OKI America, Inc. All rights reserved. See the OKIDATA Business Partner Exchange (BPX) for any updates to this material. (http://bpx.okidata.com)

Section 2: Print Operation

3.15 Mechanical Components

3.15.01 EP drum cartridge

The EP (image) cartridge consists of an EP (image) drum, a charger, and a developer. The cartridge forms a toner image on the drum, using an electrostatic latent image formed by the LED print head.

3.15.02 Registration Stepper motor

This registration stepper motor is a pulse motor of 48 steps/rotation that is two-phase excited by the signal from the R054/R050/R175/R175-2 board. It drives the hopping roller and the registration roller via two one-way clutches according to the direction of rotation.

3.15.03 Main Stepper motor

This main stepper motor is a pulse motor of 48 steps/rotation that is two-phase excited by the signal from the MCNT R054/R050/R175/R175-2 board and is the main motor of this mechanism.

3.15.04 LED head

Image data for each dot on a line is transferred from the MCNT R054/R050/R175/R175-2 board, and is received by the shift and latch registers. The 1728 LEDs are driven to radiate the image data on to the EP (image) drum.

3.15.05 Fuser

The fuser consists of a heater, a heat roller, a thermister and a thermostat.

An AC voltage from the power supply board (FXVE/FXVH) is applied to the heater under the control of the HEATON signal from the MCNT R054/R050/R175/R175-2 board. This AC voltage powers the heater. The MCNT R054/R050/R175/R175-2 board supervises the heat roller tempera-ture via the thermistor, and regulates the heater roller at a predetermined temperature (about 160 °C for OKIFAX 1050 and about 185 °C for OKIFAX 2350/2450) by connecting or disconnecting the AC voltage supply to the heater.

If the heater roller temperature rises abnormally, the thermostat of the heater voltage supply circuit is activated to interrupt the AC voltage supply forcibly.

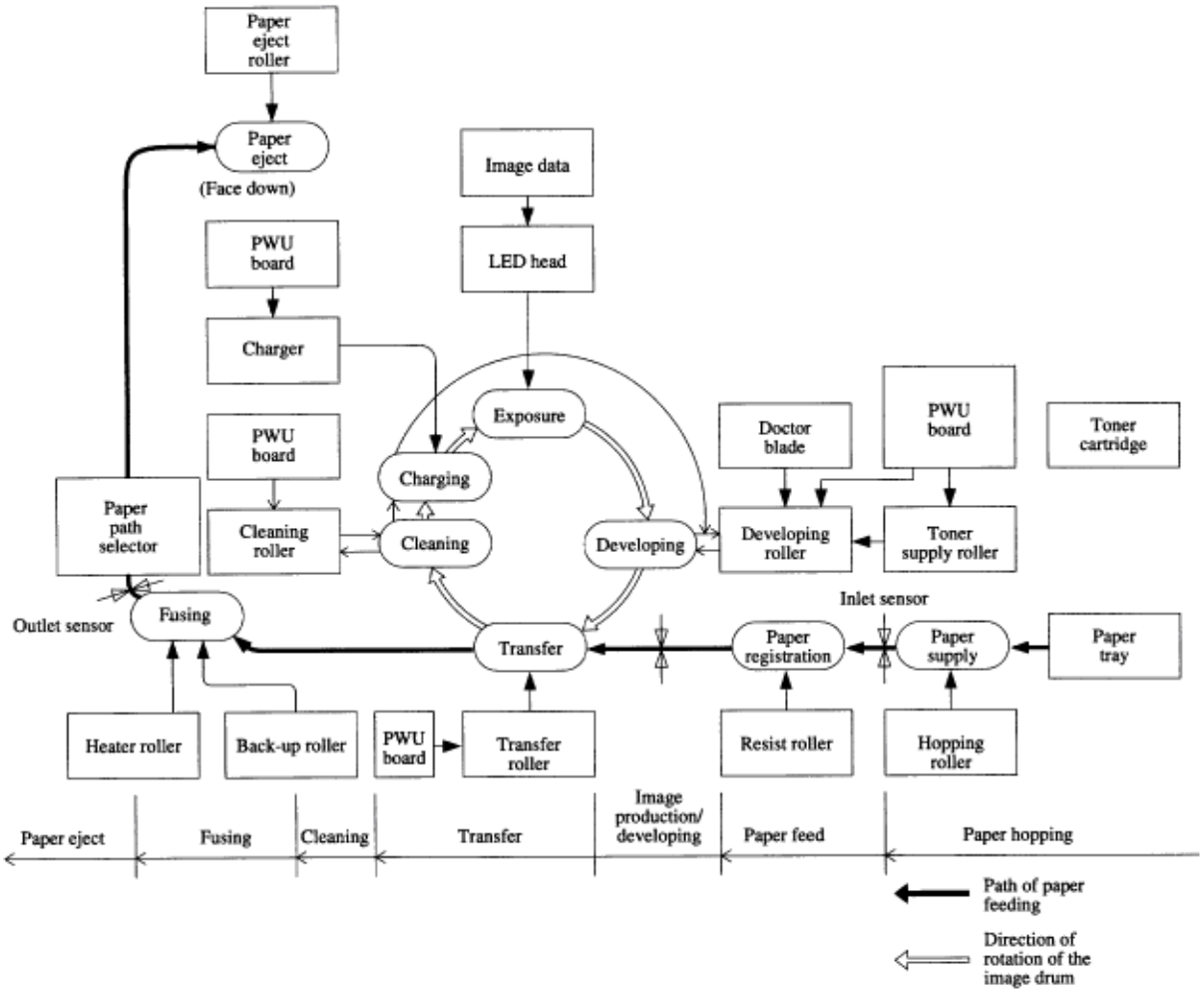

Electrographic Process Flow

Copyright 1997, Okidata, Division of OKI America, Inc. All rights reserved. See the OKIDATA Business Partner Exchange (BPX) for any updates to this material. (http://bpx.okidata.com)

Layout of Print Station Components

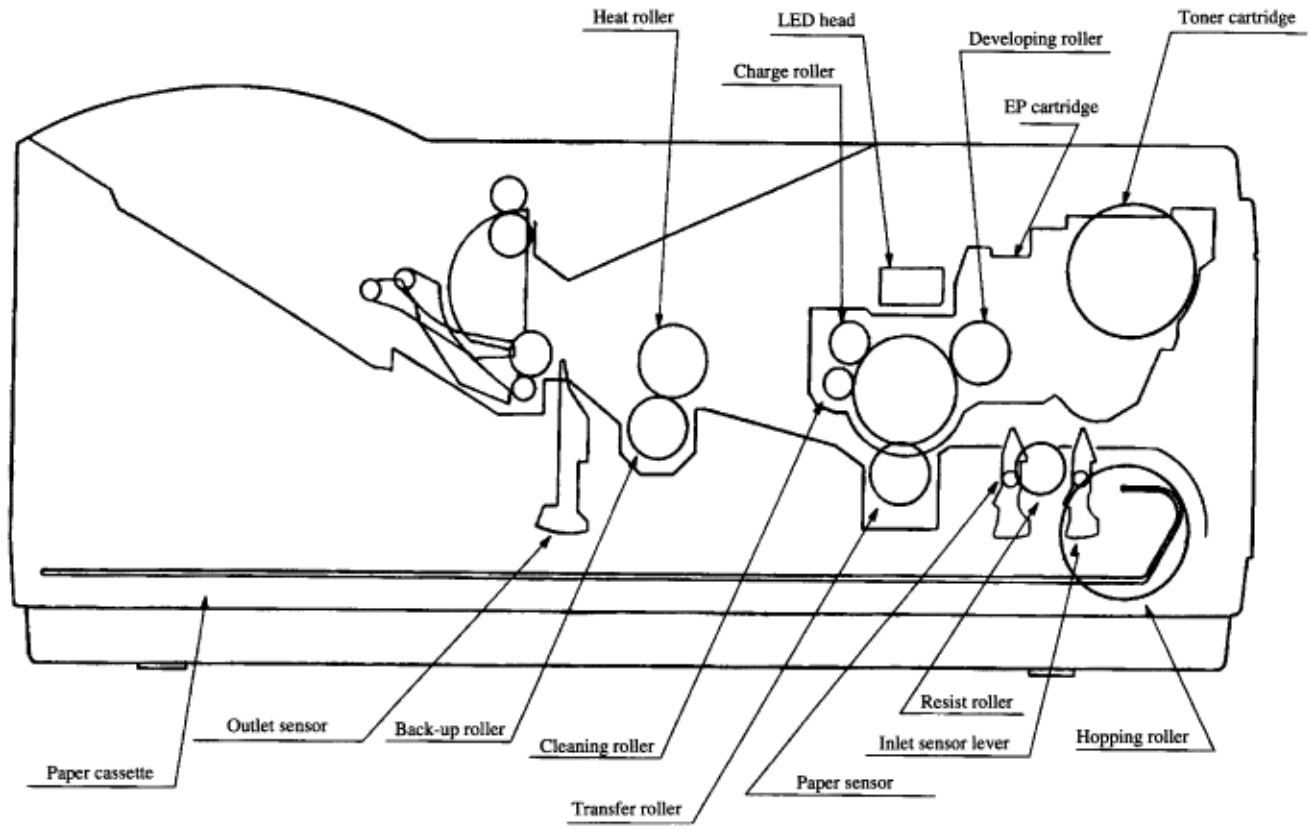

Copyright 1997, Okidata, Division of OKI America, Inc. All rights reserved. See the OKIDATA Business Partner Exchange (BPX) for any updates to this material. (http://bpx.okidata.com)

3.16 Process Operations

3.16.01 Hopping and feeding

Hopping and feeding are affected by the registration stepper motor in the mechanism shown below.

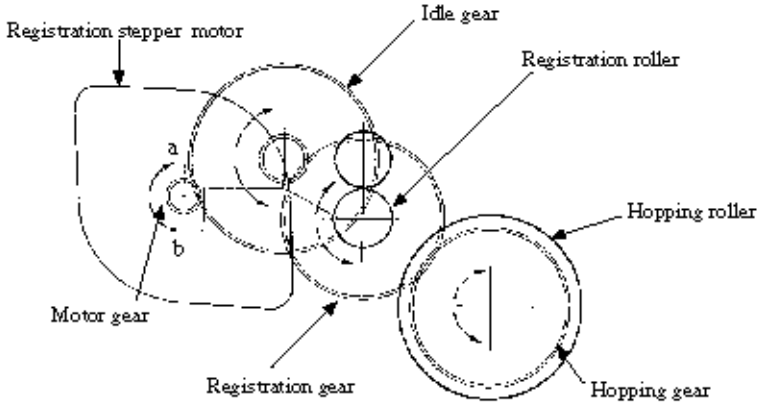

Turning the registration motor in the "a" direction drives the hopping roller. Turning the registration motor in the "b" direction drives the registration roller. The registration gear and hopping gear contain one-way clutch, so that turning each of these gears in reverse direction will not be transmitted to the corresponding roller.

Hopping

During paper hopping the registration stepper motor turns in the "a" direction (in the clockwise direction) and drives the hopping roller to advance the paper until the inlet sensor turns on. (In this case, the registration gear also turns, but the registration roller is prevented from turning by the one-way clutch gear.)

After the paper has turned on the inlet sensor, the paper is further advanced by a predetermined length until the paper hits the registration roller. The brief pause in paper advancement helps to correct skew.

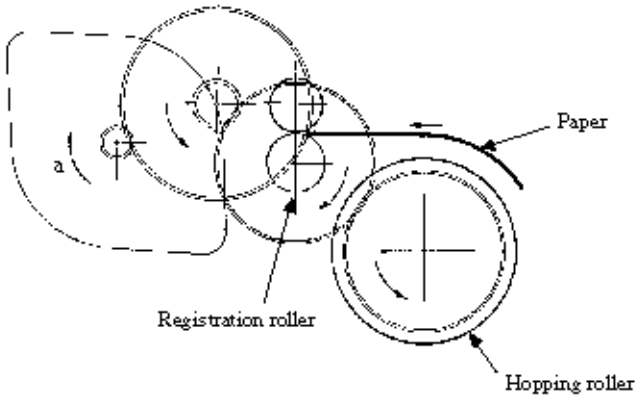

Feeding

When hopping is complete, the registration motor tuns in the "b" direction (in the counter clockwise direction) driving the registration roller to advance the paper. (In this case, the hopping gear also turns, but the hopping roller is prevented from turning by the one-way clutch gear.)
The paper is further advanced in synchrony with the print data.

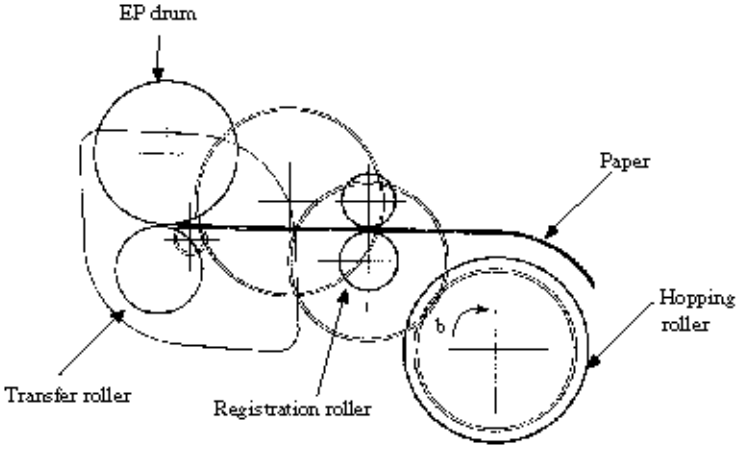

Copyright 1997, Okidata, Division of OKI America, Inc. All rights reserved. See the OKIDATA Business Partner Exchange (BPX) for any updates to this material. (http://bpx.okidata.com)

3.16.02 Charging

Charging is affected by applying a DC voltage to the charge roller that is in contact with the EP (image) drum surface.

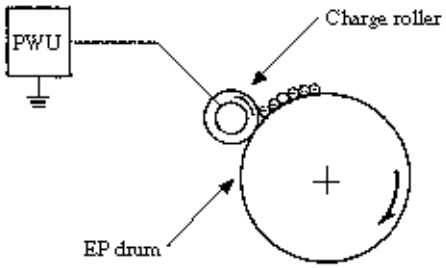

The charge roller is composed of two layers consisting of a conductive layer and a surface protective layer that has elasticity, in order to secure a good contact with the EP (image) drum. When the DC voltage (-1.35 KVDC) applied from the Power Supply Unit exceeds a threshold value, charging begins. The applied voltage is proportional to charge potential with off set of approx. -550V.

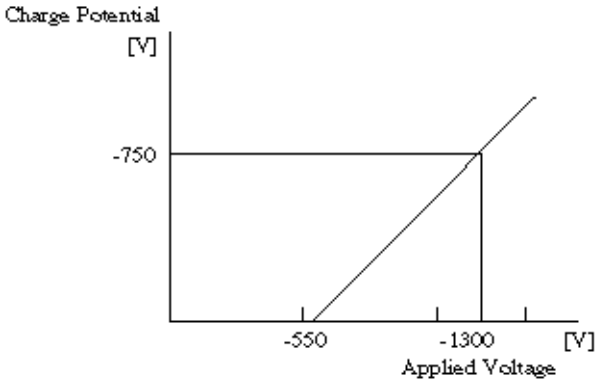

Copyright 1997, Okidata, Division of OKI America, Inc. All rights reserved. See the OKIDATA Business Partner Exchange (BPX) for any updates to this material. (http://bpx.okidata.com)

3.16.03 Exposure

Light emitted from the LED head irradiates the EP (image) drum surface with negative charges. The surface potential of the irradiated part of the EP drum drops, thereby forming an electrostatic latent image associated with the image signal.

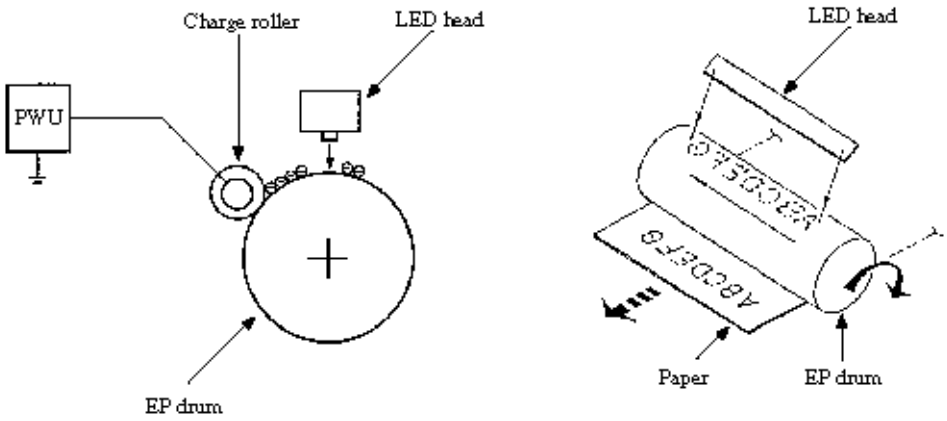

The EP (image) drum is coated with an underlayer (UL), a carrier generation layer (CGL), and carrier transfer layer (CTL) on the aluminum base. The organic photo conductor layer (OPC), comprising a CTL and a CGL, is about 20 mm thick.

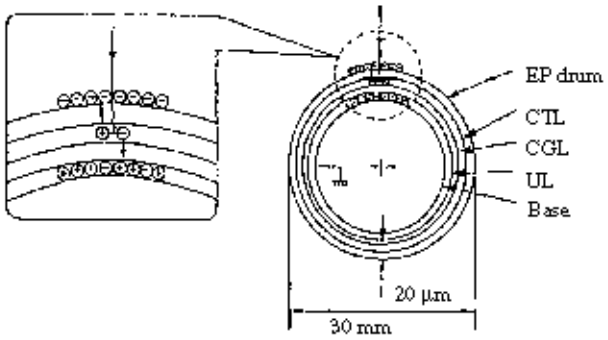

The EP (image) drum surface is charged to about -750 V by the contact charge of the charge roller.

When light from the LED head irradiates the EP (image) drum surface, the light energy generates positive and negative carriers in the CGL. The positive carriers are moved to the CTL by an electrical field acting on the EP (image) drum. Likewise, the negative carriers flow into the aluminum layer (ground).

The positive carriers moved to the CTL combine with the negative charges on the EP (image) drum surface accumulated by the contact charge of the charge roller, lowering the potential on the EP (image) drum surface. The resultant drop in the potential of the irradiated part of the EP (image) drum surface forms an electrostatic latent image on it. The irradiated part of the EP (image) drum surface is kept at about -100 V.

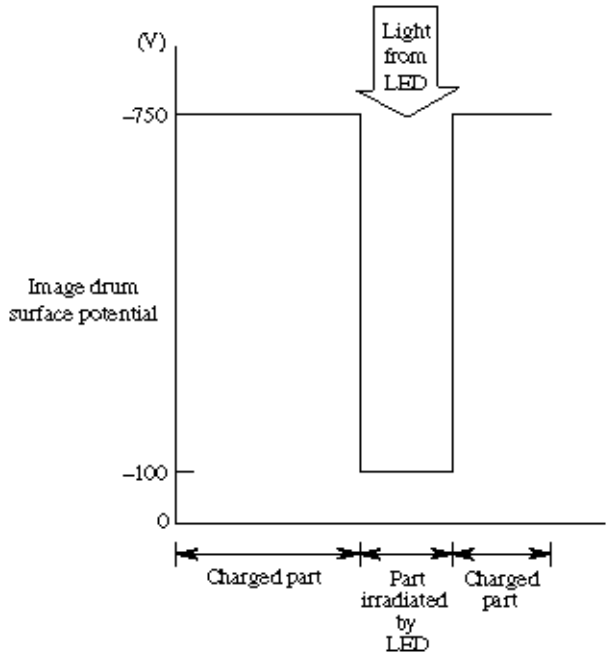

Copyright 1997, Okidata, Division of OKI America, Inc. All rights reserved. See the OKIDATA Business Partner Exchange (BPX) for any updates to this material. (http://bpx.okidata.com)

3.16.4 Developing

Toner is attracted to the electrostatic latent image on the EP (image) drum surface to convert it into a visible toner image. Developing takes place at the contact between the EP (image) drum and the devel-oping roller.

As the toner supply roller rotates while rubbing on the developing roller, a friction charge is generated between the developing roller and the toner, allowing the toner to be attracted to the developing roller. (The developing roller surface is charges positive and the toner, negative.)

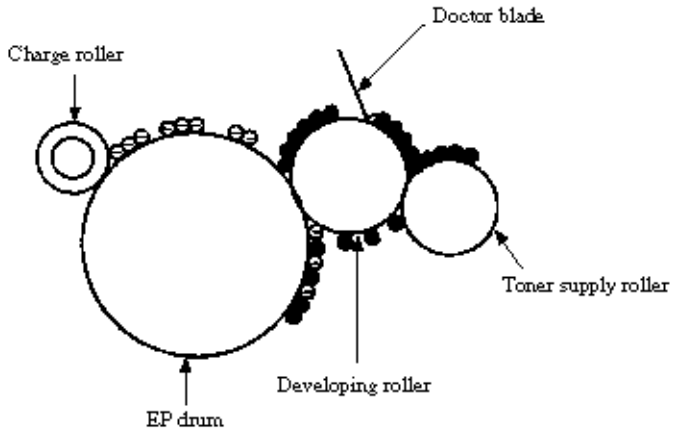

The excess toner attracted to the developing roller is scraped off by the doctor blade, forming a thin coating of toner on the developing roller surface.
Toner is attracted to the exposed part (low-potential part) of the EP (image) drum at the contact between the EP (image) drum and the developing roller, making the electrostatic latent image visible.

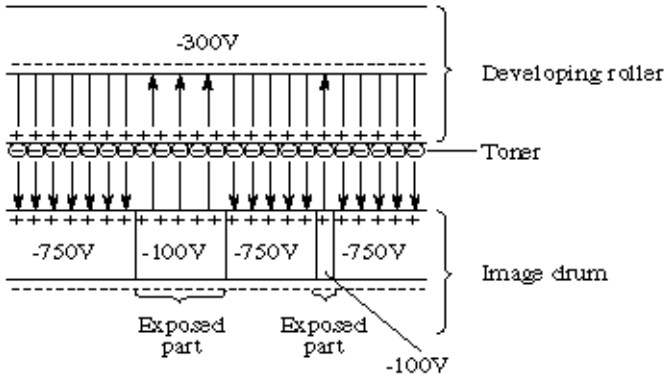

An illustration of activities at the contact point of the image drum surface and the developing roller (arrow marks denote the direction of the electric ***field). Note*** The toner supply roller and the developing roller are supplied with bias voltages required during the developing process as shown below. -450 VDC is supplied to the toner supply roller, -300 VDC to the developing roller.

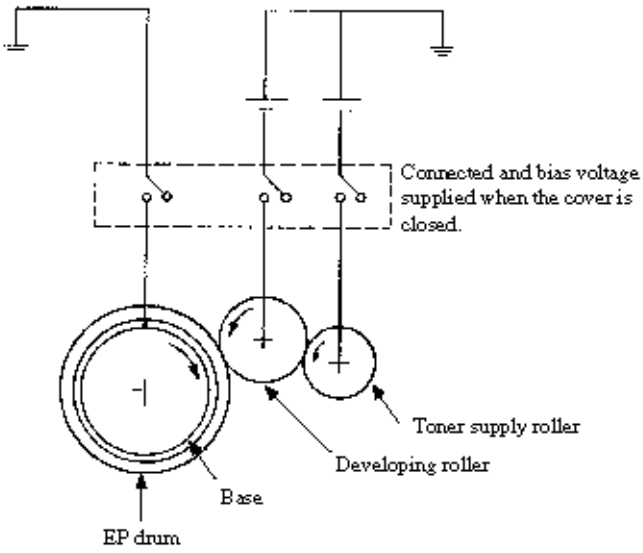

Copyright 1997, Okidata, Division of OKI America, Inc. All rights reserved. See the OKIDATA Business Partner Exchange (BPX) for any updates to this material. (http://bpx.okidata.com)

3.16.05 Transfer

The transfer roller is composed of conductive sponge material and is designed to force the EP (image) drum surface and the paper closely into contact.

Paper is placed over the EP (image) drum surface, and a positive charge, opposite in polarity to the toner, is applied to the paper from its reverse side.

The application of a high positive voltage (+1 KVDC) from the Power Supply Unit (FXVE/FXVH board) to the transfer roller causes the positive charge induced on the transfer roller surface to be transferred to the paper at the contact between the transfer roller and the paper. As a result, toner charged negative that is attracted to the EP (image) drum surface is transferred to the upper side of the paper by the positive charge on the lower side of the paper.

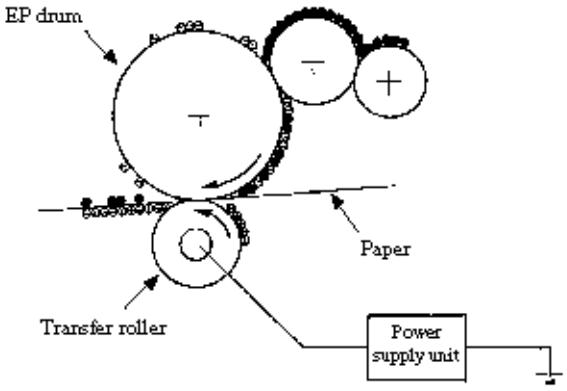

Copyright 1997, Okidata, Division of OKI America, Inc. All rights reserved. See the OKIDATA Business Partner Exchange (BPX) for any updates to this material. (http://bpx.okidata.com)

3.16.06 Fusing

After the end of the transfer operation, the unfused toner image is fused on the paper under heat and pressure as it passes between the heater roller and the back-up roller. The heater roller with a Teflon coating incorporates a 500 W heater (Halogen lamp), which heats the heat roller.
A thermister, which is in contact with the heater roller, regulates the heater roller at a predetermined temperature (about 160 °C for OKIFAX 1050 and about 185 °C for OKIFAX 2350/2450). A safety thermostat cuts off voltage supply to the heater by opening the thermostat in the event of abnormal rise in temperature.

The back-up roller is held under a pressure of 2.5 kg by the pressure spring at each side.

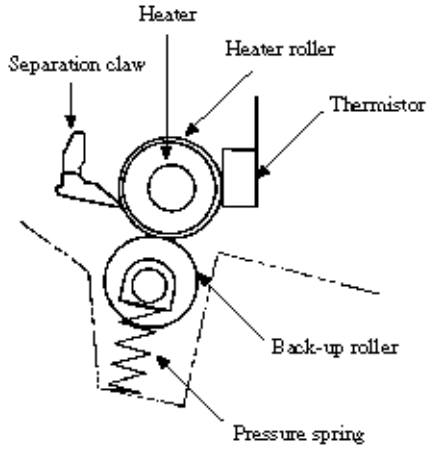

Copyright 1997, Okidata, Division of OKI America, Inc. All rights reserved. See the OKIDATA Business Partner Exchange (BPX) for any updates to this material. (http://bpx.okidata.com)

3.16.07 Cleaning

After the end of the transfer, residual toner on the EP (image) drum is attracted to the cleaning roller temporarily by static electricity to clean the EP (image) drum surface.

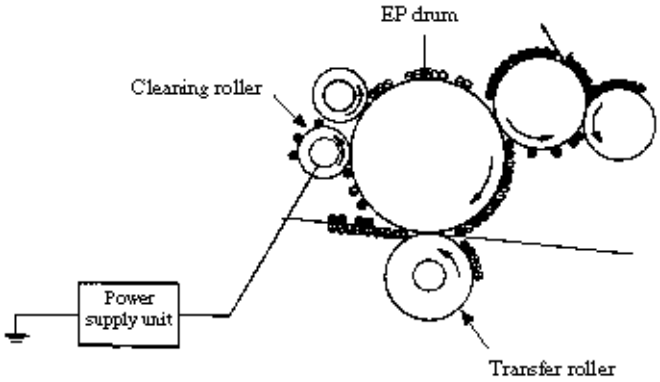

Copyright 1997, Okidata, Division of OKI America, Inc. All rights reserved. See the OKIDATA Business Partner Exchange (BPX) for any updates to this material. (http://bpx.okidata.com)

3.16.08 Cleaning of rollers

The charge roller, transfer roller and cleaning roller are cleaned in the following cases:

- In warning up at power-on time
- In warning up after the cover is opened and closed
- When the number of accumulated sheets is 10 or more and the printout operation ends
- When a cleaning cycle is requested in the technical function local test mode

Changes in bias voltage applied to each roller move adhesive toner from the roller to the EP (image) drum and return it to the developer.

	Cleaning "NO" (V)	Cleaning "YES" (V)
DB+	-	+300 V
DB-	-300 V	-300 V
TR+	+1000 V	+1000 V
TR-	-	-750 V
CB (cleaning)	+400 V	+400 V
CH-	-1350 V	-1350 V

Copyright 1997, Okidata, Division of OKI America, Inc. All rights reserved. See the OKIDATA Business Partner Exchange (BPX) for any updates to this material. (http://bpx.okidata.com)

3.17 Actual Electo-photographic Process

The electro-photographic process of the OKIFAX 1050/2350/2450 consists of six essential processes.

The following Figure 3.17.1 provides a general description.

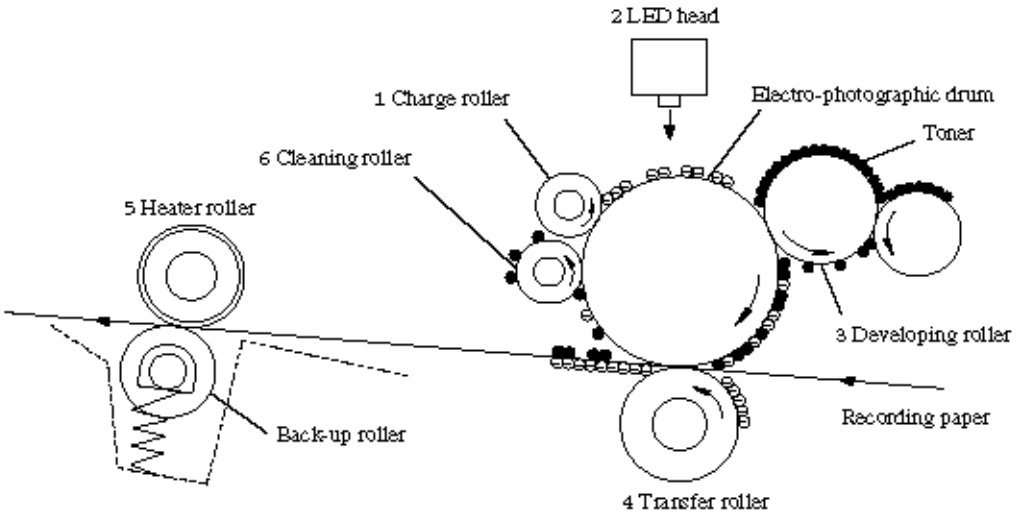

* Process:

1 : Charging
2 : Exposure
3 : Developing
4 : Transfer
5 : Fusing
6 : Cleaning

Figure 3.17.1 Actual EP Process

Copyright 1997, Okidata, Division of OKI America, Inc. All rights reserved. See the OKIDATA Business Partner Exchange (BPX) for any updates to this material. (http://bpx.okidata.com)

3.18 Errors List

The errors are listed below.

3.18.01 Major trouble errors

- Fuser error (printer alarm 4)
- Fan error (printer alarm 3)
- Paper supply error ("LOAD PAPER" advisory message)
- Paper transport system error ("PAPER JAM" error message)
- Paper exit jam ("PAPER JAM" error message)
- Paper size error ("PAPER JAM" error message)
- 2'nd tray communication error (printer alarm 2)
- Cover open ("COVER OPEN" advisory message)

3.18.02 Recoverable errors

- 2'nd tray door open
- No cassette in 2'nd tray
- No paper in 1'st cassette
- No paper in 2'nd cassette

3.18.03 Alarms (warning)

- Low toner

Note:

1. The major trouble errors do not recover after an error has occurred until the problem is corrected.

2. A recoverable error resets automatically by itself once the cause of error has been removed. Printing is not possible while an error exists.

3. The alarm serves as a warning only and the printing operation is performed.

Copyright 1997, Okidata, Division of OKI America, Inc. All rights reserved. See the OKIDATA Business Partner Exchange (BPX) for any updates to this material. (http://bpx.okidata.com)

3.19 Major Trouble Errors

3.19.01 Fuser Error

The fuser error indicates an error in thermister on heater. In case the fuser error occurs at the time of printing, the heater is turned off immediately, but the printing continues of that page. However, if the error occurs before the write sensor is turned on, the motors stop.

3.19.02 Fan Error

A fan error is generated when the FANSNS signal lead goes "1" while the fan is running at full speed. Operation of the FANSNS signal when the fan is turned on is described below.

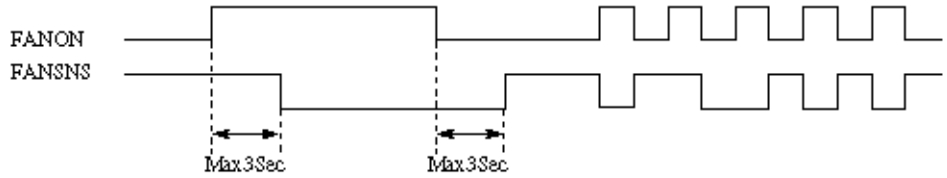

Since the fan alarm is not monitored during printing, the fan alarm does not appear until the completion of printing operation. In other words, the printing will continue even if the fan alarm occurs during printing.

3.19.03 Toner Low Detection

Composition The device consists of a stirring gear which rotates at a constant rate, a stirring bar and a magnet on the stirring bar. The stirring bar rotates through the link on a protrusion in the stirring gear.

The configuration of stirring bar in the figure below may differ. The principle of toner detection, however, remains the same.

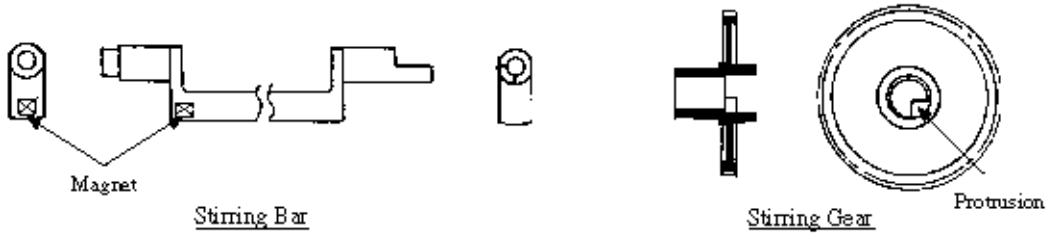

Operation Toner Low is detected by monitoring the time interval between the encounter of the magnet set on the sensor lever and the magnet on the stirring bar.
• Operation during toner full state
When the stirring bar magnet rotates past the toner sensor magnet, the sensor lever toggles the toner optical sensor on the power supply board.
When the magnet on the stirring bar reaches the maximum height, since the other side is being dipped in the toner, the stirring bar rotates at a constant speed.

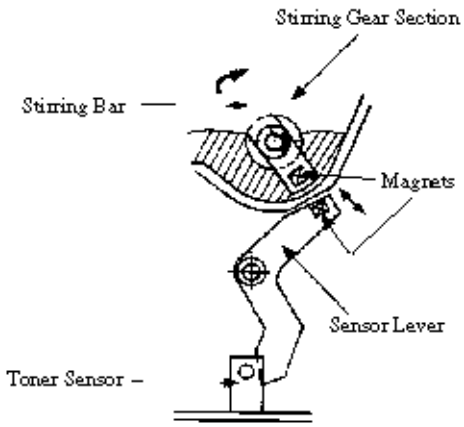

• Operation during toner low state
When the stirring bar reaches the maximum height, since there is no resistance provided by the toner on the other side, it falls to the minimum height due to its own weight. Because of this, the time interval during which it is in encounter with the magnet of the sensor lever becomes long. By monitoring this time interval, toner low can be detected.

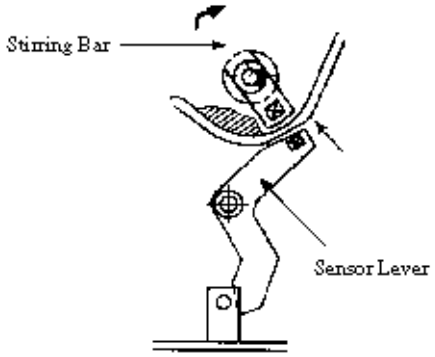

Low Toner Alarm
A check for low toner is carried out at all times when the drum is rotating.
• The toner sensor is not monitored while the drum motor is not rotating.
TONER FULL state

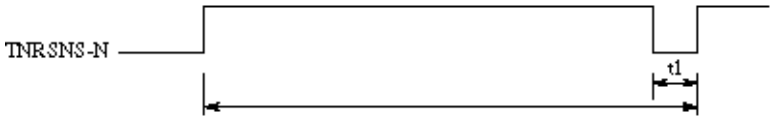

TONER LOW state

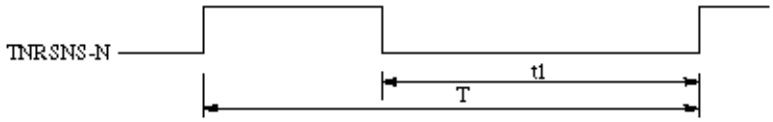

• When the toner low state is detected 2 times consecutively, Toner Low is established.
• When the toner full state is detected 2 times consecutively, Toner Low is canceled.
• When there is no change with the toner sensor for 2 cycles (6.5 sec. x 2) or more, then the Toner Sensor Alarm is activated.

Printing Speed	T	t1 (Toner Exists)	Remarks

4 ppm	6.4 sec.	0.31 ~ 2.00 sec.	OKIFAX 1050
8 ppm	3.2 sec.	0.16 ~ 1.00 sec.	OKIFAX 2350/2450

Copyright 1997, Okidata, Division of OKI America, Inc. All rights reserved. See the OKIDATA Business Partner Exchange (BPX) for any updates to this material. (http://bpx.okidata.com)

3.20 Cleaning

The image drum needs cleaning since it gets dirty after having printed copies for a number of times.

The two kinds of cleaning are listed in the table below:

Cleaning Type	Function	Remarks
Image Drum Cleaning	This cleaning removes excess toner that has accumulated on the Image Drum. The excess toner is removed to the developing roller where it is recycled.	Cleaning is automatically performed when the number of prints exceed 10 sheets or the one-job operation ends. (At the end of communication or copy operations)
CH (charge roller) cleaning	This cleaning removes the residual toner on the charging roller surface. The toner is removed by moving to the recording paper from charging roller and image drum.	Manual operation • Technical function (self test mode)

Copyright 1997, Okidata, Division of OKI America, Inc. All rights reserved. See the OKIDATA Business Partner Exchange (BPX) for any updates to this material. (http://bpx.okidata.com)

3.21 Sensors and Switches

3.21.01 Paper Jam Detection

Paper jam detection monitors the location of paper when the printer is powered ON and during printing. If any of the following jams are present, the printing process is interrupted and the message PAPER JAM will be displayed on the LCD.

To return to the printing process, the paper jam condition MUST be cleared. This is accomplished by opening the upper cover, clearing the jam, and closing the cover.

Paper Outlet Jam

This jam occurs if, The paper does **NOT** pass over the outlet sensor within a pre-determined period of time, however, the paper has already passed over the paper sensor.

Paper Size Error

The time interval between when the paper contacts the paper sensor and the outlet sensor determines which size (length) paper is being used.

This error occurs if, The paper size of the loaded paper differs by + 45 mm or more from the paper size set by the menu.

Cover Open Switch

When the stacker cover is opened, the cover open microswitch on the power supply board (FXUE) is deactivated. This disables the + 38 vdc and the high voltage power supply circuit. As a result, all high voltage outputs are interrupted. At the same time, the CVOPN signal is sent to the main control board (MCNT-150) to notify it of the OFF state of the microswitch. The MCNT-150 executes the cover open routine. The operation panel displays the message COVER OPEN.

Copyright 1997, Okidata, Division of OKI America, Inc. All rights reserved. See the OKIDATA Business Partner Exchange (BPX) for any updates to this material. (http://bpx.okidata.com)

3.21.02. Sensors and switch control

Six types of sensors are used in the printer as listed below. All of their output are processed by the Main Control (MCNT) board.

- Inlet sensor 1
- Write sensor (To detect the paper leading edge for printing)
- Outlet sensor
- Paper end sensor
- Toner end sensor
- Cover status switch

The functions of various sensors are described in the following table

Sensor	Sensor Name	Function
PS-3	Inlet sensor 1	This photosensor is positioned before the registration roller to detect whether the paper has entered into the printer section.
PS-2	Write sensor	Detects the arrival of paper at designated position on the paper transport route inside the printer in order to turn on the light of the LED head. 0: Paper exists, 1: Paper does not exist
PS-1	Outlet sensor	Located at the exit of the printer to supervise the paper exit operation. 0: Paper exists, 1: Paper does not exist
PS-4	Paper sensor	Detects the presence of paper in the paper cassette, and presence of cassette. 0: Paper and cassette installed, 1: Paper out, or cassette not installed
PS-6	Toner sensor	Detects the remaining toner in the toner cartrige.

SW-2	Cover open switch	Detects whether the cover of the printer section is open or not. (Interlock for high voltage power supply) 0: Cover is open, 1: Cover is closed

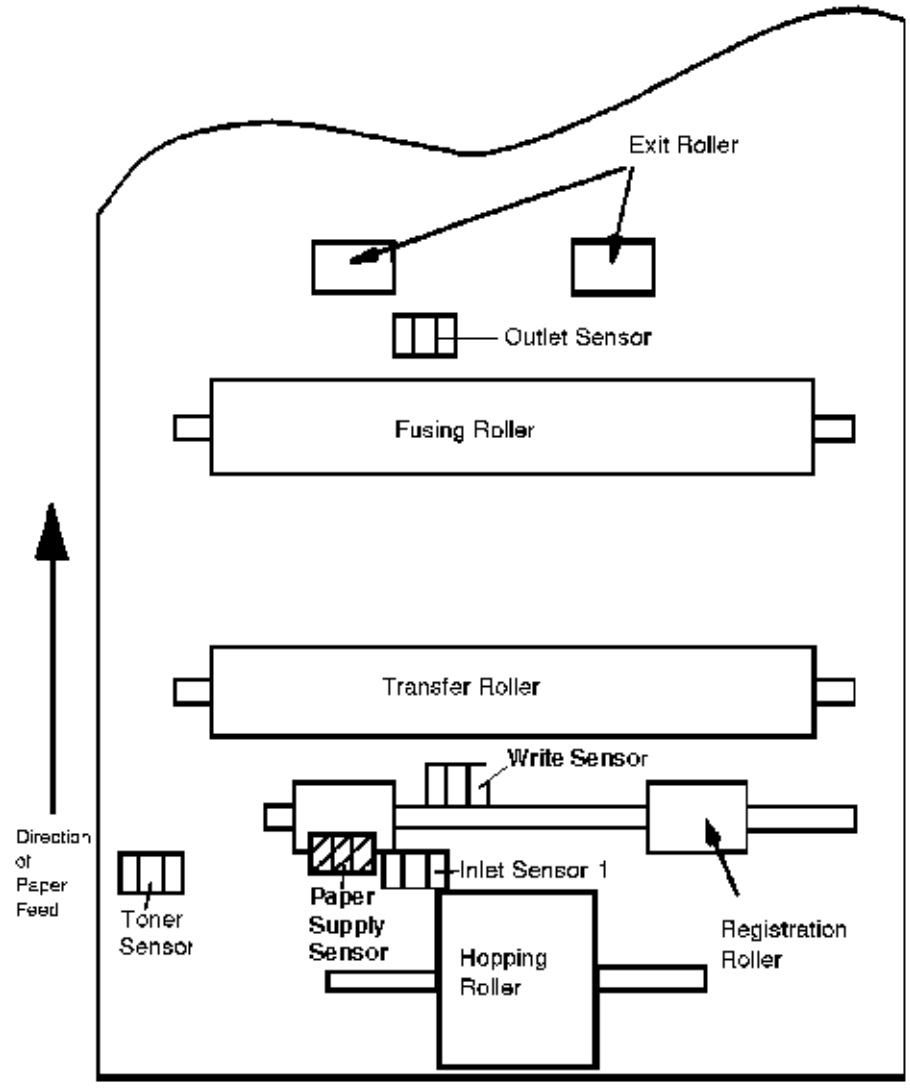

Figuree 3.21.1 Sensor Location (Top View)

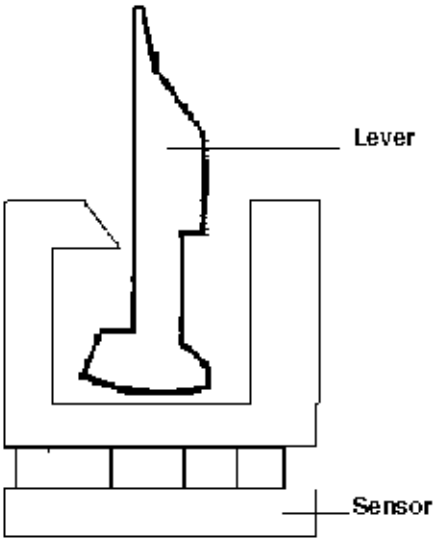

Figure 3.21.2 Detail of Sensor/Lever

Paper Inlet Jam This jam occurs when either of the following conditions occur. When the printer is powered ON, paper is at inlet sensor 1. After the hopping operation is attempted three times, the leading edge of the paper does *NOT* reach inlet sensor 1.

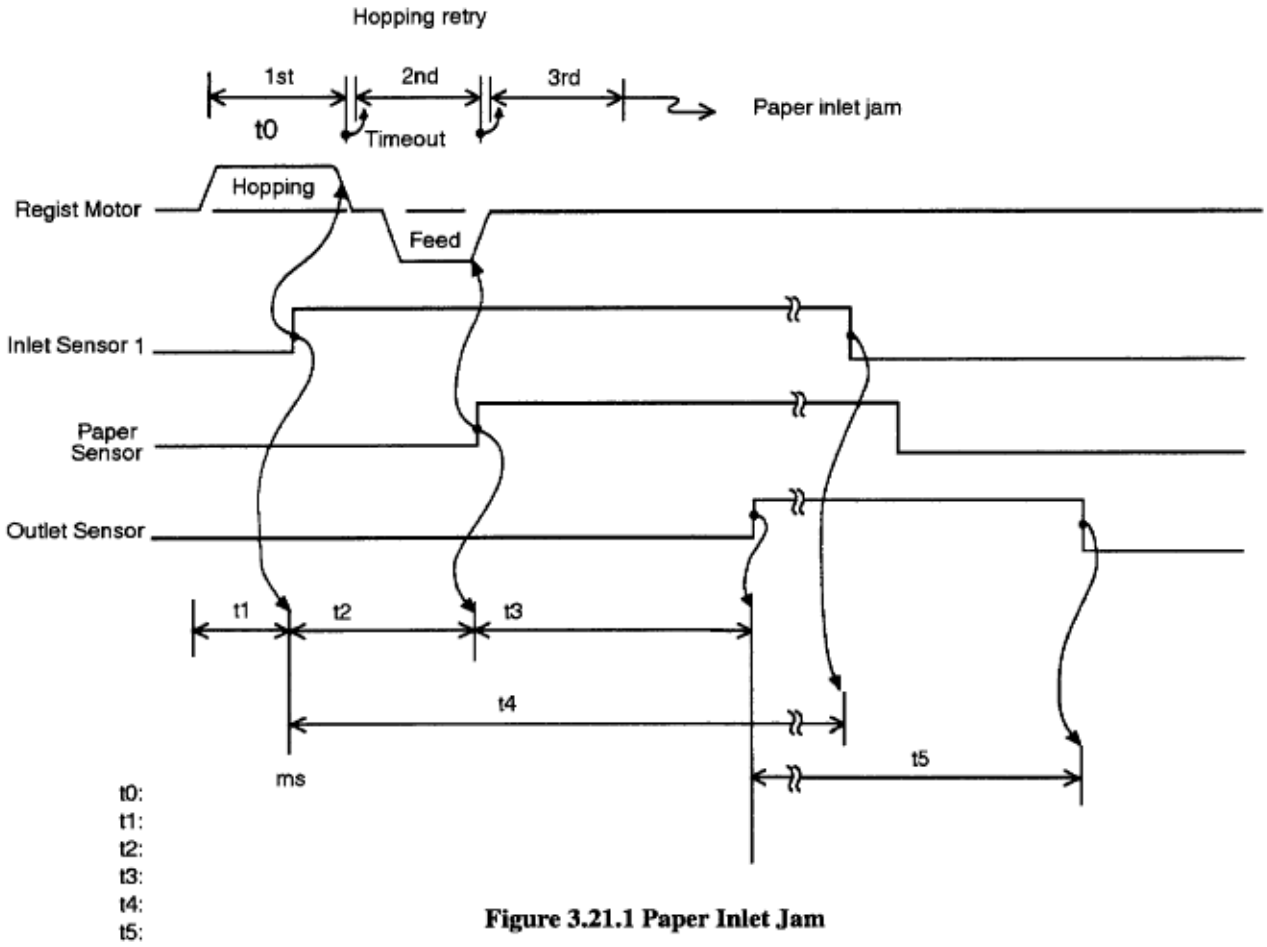

Figure 3.21.1 Paper Inlet Jam

Figure 3.21.1 Paper Inlet Jam

Paper Feed Jam This jam occurs when either of the following conditions occur. The paper does not pass over the paper sensor within a pre-determined period of time. The leading part of the paper does not reach the outlet sensor within a pre-determined period of time after the paper has passed over the paper sensor.

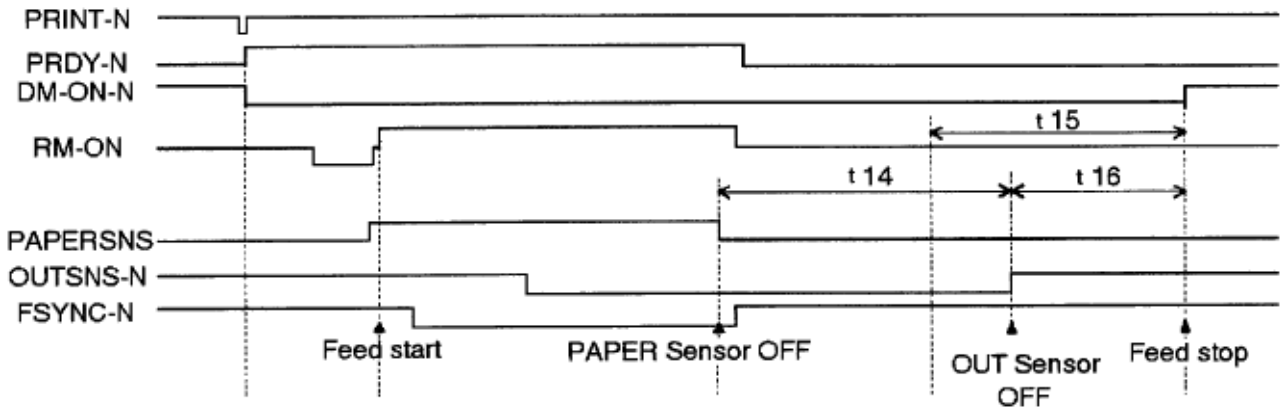

Figure 3.21.2 Paper Feed Jam

Copyright 1997, Okidata, Division of OKI America, Inc. All rights reserved. See the OKIDATA Business Partner Exchange (BPX) for any updates to this material. (http://bpx.okidata.com)

This chapter explains the procedures for replacement of parts in the field.

4.1 General

4.1.01 Precautions for Parts Replacement

1. Before starting disassembly and reassembly, always turn the AC power switch OFF, and pull out the AC plug.

Note: Unplug the AC power cord from the wall outlet first and then from the facsimile.

2. Do not try to disassemble as long as the facsimile is operating normally.

3. Do not remove unnecessary parts: Try to keep disassembly to a minimum.

4. When disassembling, follow the prescribed sequence. Otherwise, parts may be damaged.

5. Since screws and small parts are likely to be lost, they should temporarily be attached to their original positions.

6. When handling items such as printed circuit boards, do not wear gloves that are likely to generate static electricity.

7. Using a wrist band connected to the ground will protect semiconductors on printed circuit boards from the static electricity.

8. Do not place printed circuit boards directly on the equipment or on the floor.

Copyright 1997, Okidata, Division of OKI America, Inc. All rights reserved. See the OKIDATA Business Partner Exchange (BPX) for any updates to this material. (http://bpx.okidata.com)

4.1.2 Tools

Table 4.1.1 shows the tools required for the replacement of parts such as circuit boards and mechanical units.

Table 4.1.1 Tools

No.	Service tools		Q'ty	Remarks
1	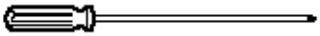	Philips screw driver(L)	1	
2	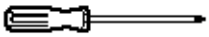	Philips screw driver(M)	1	
3		Philips screw driver(S)	1	
4		Flat screw drivers(S)	1	
5		Philips screw driver(S)	1	
6		Radio pliers	1	
7		Nippers	1	
8		Multimeter	1	Short-circuit test

Copyright 1997, Okidata, Division of OKI America, Inc. All rights reserved. See the OKIDATA Business Partner Exchange (BPX) for any updates to this material. (http://bpx.okidata.com)

4.2 How to Disassemble and Reassemble

This section explains how to disassemble and reassemble the fax.

Copyright 1997, Okidata, Division of OKI America, Inc. All rights reserved. See the OKIDATA Business Partner Exchange (BPX) for any updates to this material. (http://bpx.okidata.com)

4.2.1 LED Print Head

(1) Disassembly procedure

a) Open the Document Table assembly.

b) Open the Stacker Cover by pressing the latches inward.

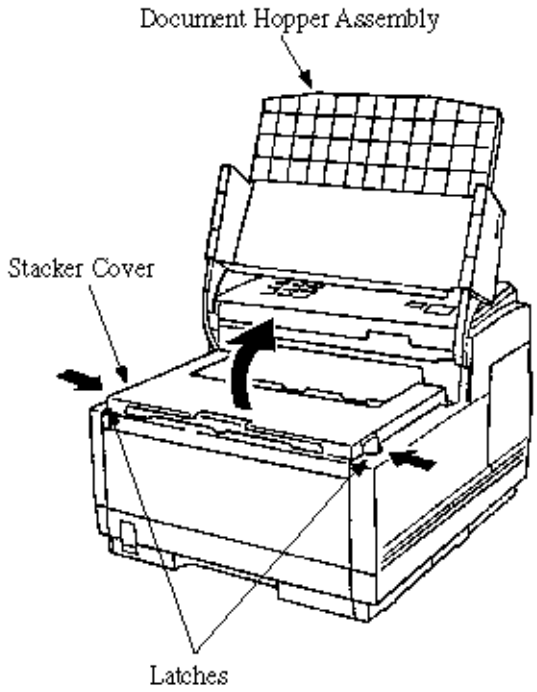

c) Disconnect the flat cable from the PC connector.

d) Remove the LED print head while spreading the retainer on the Stacker Cover.

Note: Be sure not to directly touch or push on the lens of the LED print head.

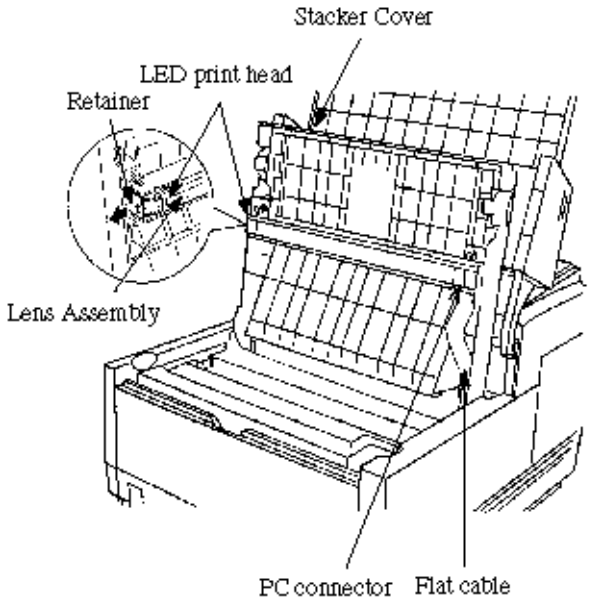

(2) Reassembly procedure

Reverse the disassembly procedures.

Note: **After replacing the LED print head, set drive time of the print head using the adjustment procedure in Chapter 5.**

Copyright 1997, Okidata, Division of OKI America, Inc. All rights reserved. See the OKIDATA Business Partner Exchange (BPX) for any updates to this material. (http://bpx.okidata.com)

4.2.2 Image Drum, Rear Cover, NCU Cover, Main Cover, Separation Plate, NCU Board, Modem Board

(1) Disassembly procedure

1) Image Drum, Rear Cover, NCU Cover, Main Cover

a) Open the Document Hopper assembly.

b) Open the stack cover by pressing the latches inward.

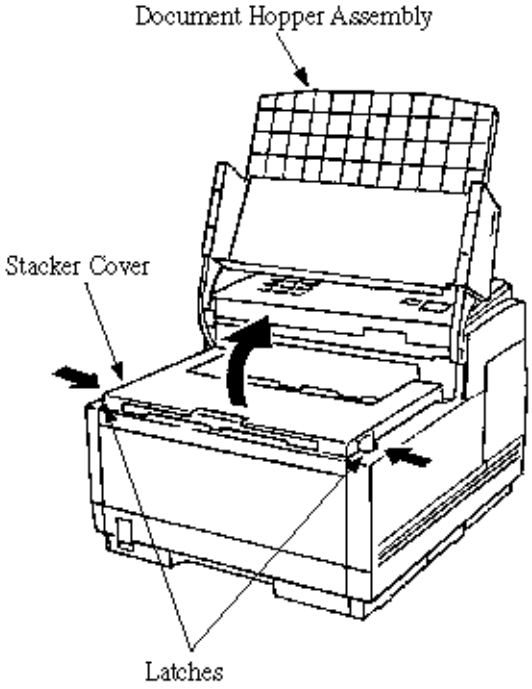

c) Remove the Image Drum from the equipment.

d) Remove the two screws (1).

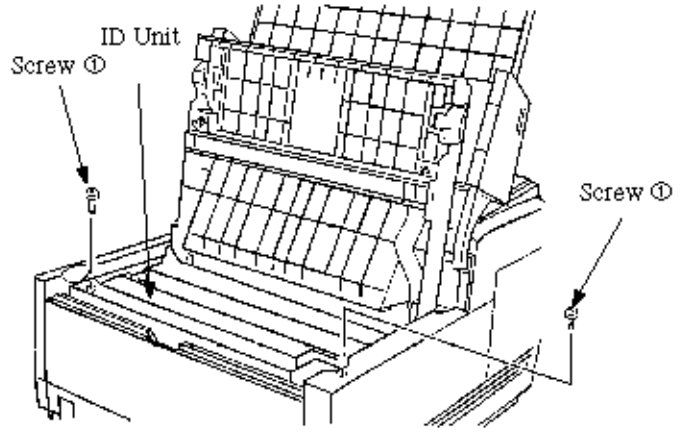

e) Remove the Rear Cover by remov-ing two screws (2).

f) Remove the NCU Cover by remov-ing one screw (3).

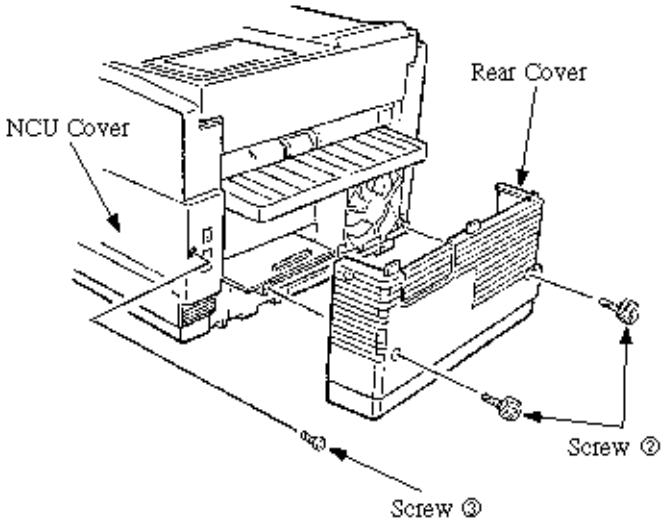

g) First, lift the Main Cover from the front side. Then, remove the Main Cover by pushing it toward the rear to dislodge it from the nails at both sides on the rear side. Continue to lift and remove the cover.

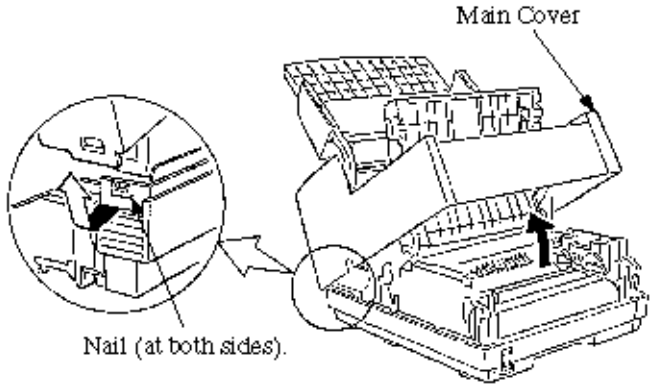

2) Separation Plate

a) Remove the Separation Plate by removing two screws 4 .

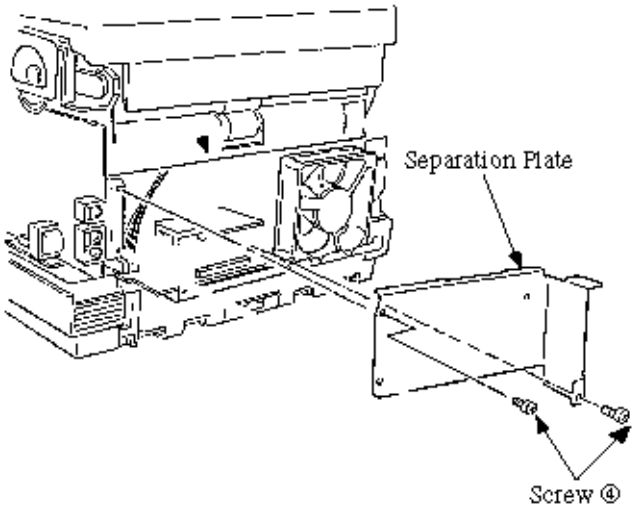

3) NCU Board, MODEM Board

a) Remove the NCU Board by removing two screws 5 . Lift board from its connector.

b) Remove the MODEM Board by removing one screw 6 . Lift board from its connector.

Note: OKIFAX 1050: The modem is part of the MCNT PCB and is not removable.

OKIFAX 2350: 9.6 kbps board standard. 14.4 kbps board is optionally available.

OKIFAX 2450: 14.4 kbps board standard.

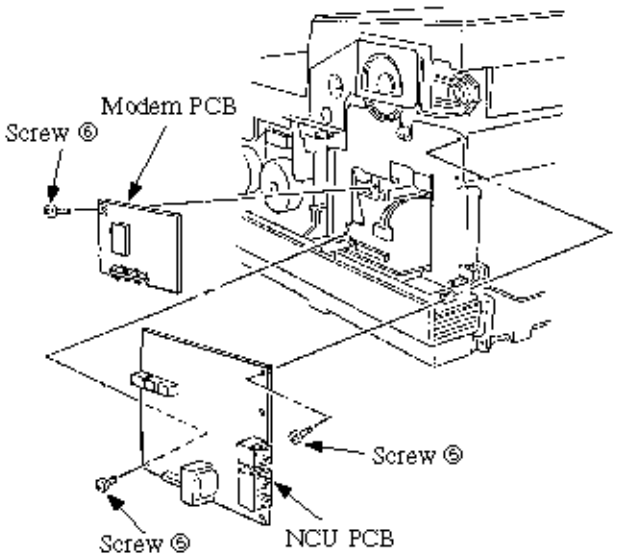

(2) Reassembly procedure

Reverse the disassembly procedures.

Copyright 1997, Okidata, Division of OKI America, Inc. All rights reserved. See the OKIDATA Business Partner Exchange (BPX) for any updates to this material. (http://bpx.okidata.com)

4.2.3 Control Panel Assembly, Paper Guide (U) Assembly.

(1) Disassembly procedure

1) Control Panel Assembly and Paper Guide (U) Assembly

a) **First, carry out the disassembly procedure up to the point of the 4.2.2 (Main Cover, NCU Cover, Rear Covers, Separation Plate, NCU Board, and Modem).**

b) Remove the ground cables by removing one screw (1).

c) Disconnect the Control Panel Connector Cable from the MCNT Board. Carefully remove the cable from its mounting hooks, and remove the ferrite core from the cable. The ferrite core should be saved for reassembly.

d) Open the Control Panel Assembly as far as possible, then slide it to the right to dislodge it from its hinges. Carefully remove its cable and ground wires from the frame.

e) To separate the Control Panel Assembly from the Paper Guide U Assembly: Lay the Control Panel Assembly face down, using care not to scratch the panel surface. Remove the two screws that secure the Control Panel Assembly to the Paper Guide U Assembly. Holding the Paper Guide U Assembly by its latches, lift it up and away from the Control Panel Assembly. Disconnect the Control Panel Cable from the OPE Board, and remove it and a ground wire from the Paper Guide U Assembly.

Note: The Control Panel Assembly does not include the cable. Save the Control Panel Cable for reassembly. ***Note:*** During reassembly, use care not to break the 3 mounting tabs. When attaching the Control Panel Assembly to the Paper Guide U, use reverse order of the disassembly procedure.

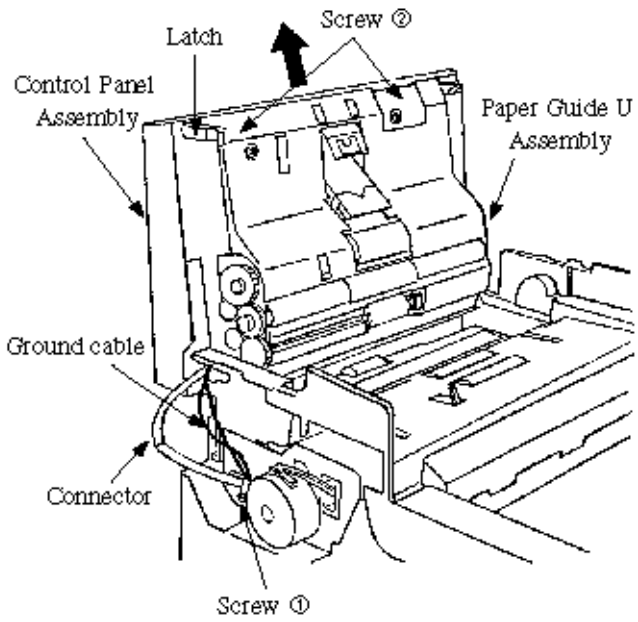

2) Paper guide (U) Assembly

a) Separation Rubber

a. The Separation Rubber can be removed from the Paper Guide (U) Assembly by lifting it out and away from its mounting tabs.

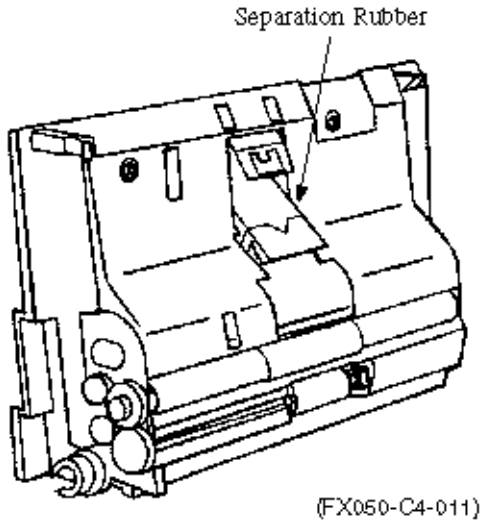

(FX050-C4-011)

b) Feed Roller

a. Remove the ground cables by removing two screws (5).

b. Remove the Feed Roller by removing the gear and ADF bearings. Use care to maneuver the roller around the ground plates with as little bending of the plates as possible.

Note: Do not remove the ground plates, as they are electrically connected to the static brushes.

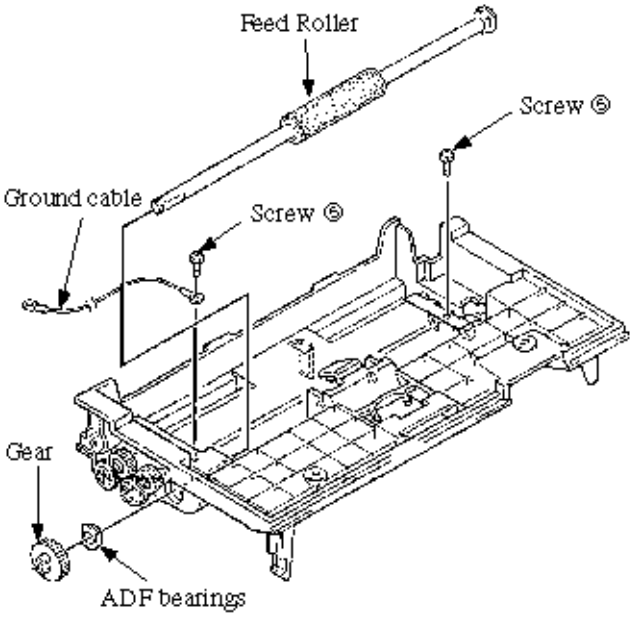

c) Scan Roller Remove the Scan Roller by remov-ing the gear and ADF bearing.

d) Exit Roller Remove the Exit Roller while spreading and holding up the fixing hook. The gear end of the shaft is keyed. Be sure to align the key when removing the shaft.

Note: Be careful as not to break the shaft of the Exit Roller when removing.

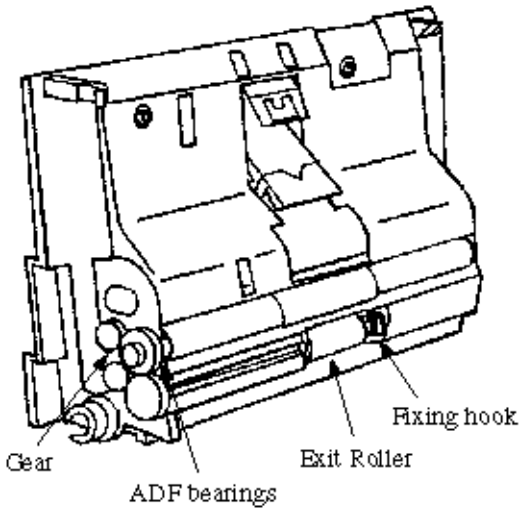

(2) Reassembly procedure

Reverse the disassembly procedures.

Copyright 1997, Okidata, Division of OKI America, Inc. All rights reserved. See the OKIDATA Business Partner Exchange (BPX) for any updates to this material. (http://bpx.okidata.com)

4.2.4 Sub-roller, ADF Roller Assembly, Pinch Roller, Contact Image Sensor, Document Detectors (PC1 and PC2).

(1) Disassembly procedure

1) Scanner Unit

a) **First, carry out the disassembly pro-cedure up to the point of the 4.2.2 (Rear Cover and Main Cover) and 4.2.3 (Control Panel Assembly and Paper Guide (U) Assembly).**

b) Disconnect the connectors from the MCNT Board and slide the AC inlet from the scanner frame. The numbers of connector are shown below:

- OKIFAX 1050: 6 connectors
- OKIFAX 2350: 7 connectors
- OKIFAX 2450: 8 connectors

c) Remove the Scanner Unit by removing the three screws (1).

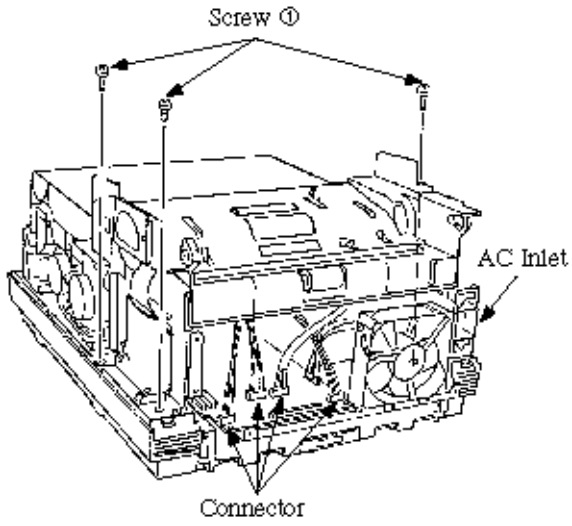

2) Scanner Motor

a) Remove the Scanner Motor by removing the two screws (2).

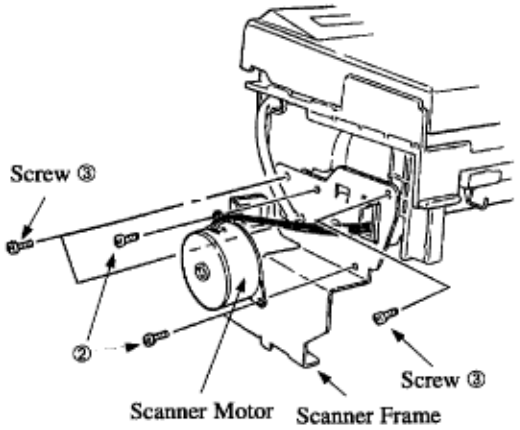

3) Scanner Frame

a) Remove the Scanner Frame by removing the three screws (3).

4) Sub-roller, ADF roller assembly, Pinch Roller, Contact Image Sensor

- Turn the Scanner Frame Assembly upside down and perform the disassembly procedure.

a) Remove the Bottom Plate by removing the three screws (4).

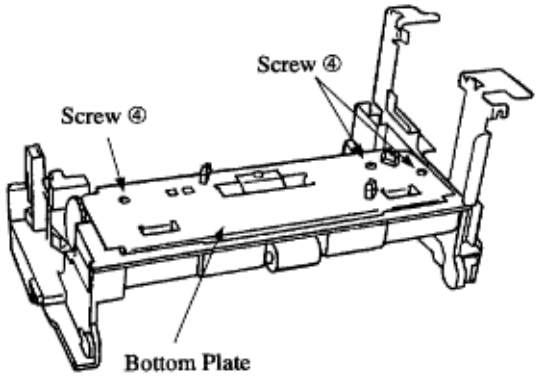

b) Remove the sub-roller from the Scanner Frame.

c) Remove the spring (1) from the Scanner Frame.

d) Remove the ADF Roller Assembly by removing the gear on the Scanner Frame.

e) After removing the ADF Roller, remove the Pinch Roller by holding up the two springs (2) while the Pinch Roller Shaft is pushed and released.

f) Remove the Contact Image Sensor by disconnecting the connector.

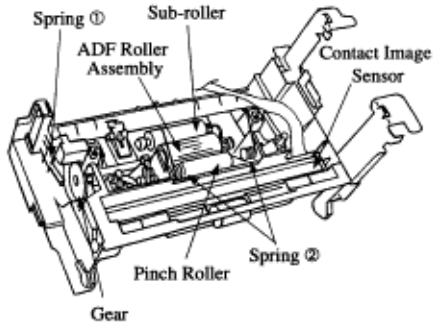

5) PC1, PC2

a) After disconnecting the two connectors, remove the photocoupler sensors PC1 and PC2 on the Bottom Plate by carefully pressing the latch with a flat screwdrivers.

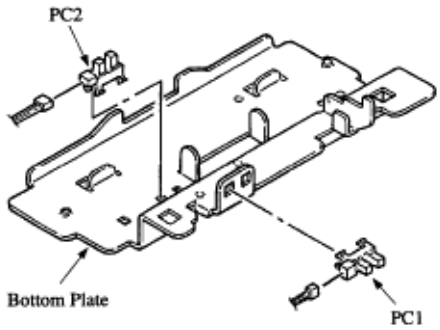

(2) Reassembly procedure

Reverse the disassembly procedure.

Copyright 1997, Okidata, Division of OKI America, Inc. All rights reserved. See the OKIDATA Business Partner Exchange (BPX) for any updates to this material. (http://bpx.okidata.com)

4.2.5 Registration Stepper Motor, Main Stepper Motor, release Guide Assembly, Eject Roller Assembly, Manual Guide Assembly (only for OKIFAX 2350/2450), Stack Cover, Fusing Unit

(1) Disassembly procedure

- First, carry out the disassembly procedure up to the point of the Scanner Unit Assembly removal **(Refer to Sub-section 4.2.4 .)**

1) Registration Stepper Motor and Main Stepper Motor

a) Remove the Registration Stepper Motor by removing the two screws (1), then remove the wire harness connector from the MCNT board.

b) Remove the Main Stepper Motor by removing the two screws (2), then remove the wire harness connector from the MCNT board.

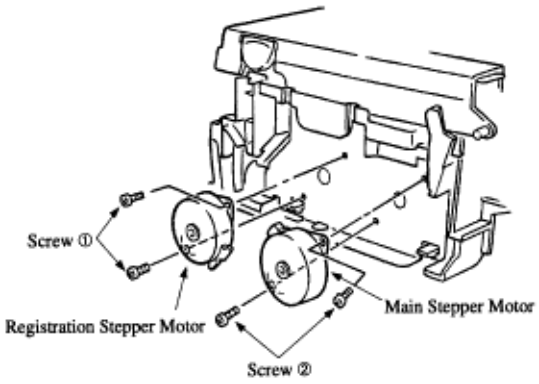

2) Release Guide Assembly (blue)

a) Remove the Release Guide Assembly by removing the Release Spring. Using a flat blade screw driver, carefully pry the mounting pins from the black Eject Roller Assembly.

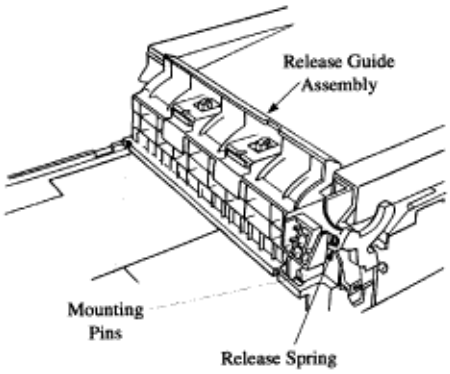

2) Eject Roller Assembly (1)

a) Using a flatblade screwdriver, press the latch (2) inward and hold, while lifting the eject roller assembly up and out.

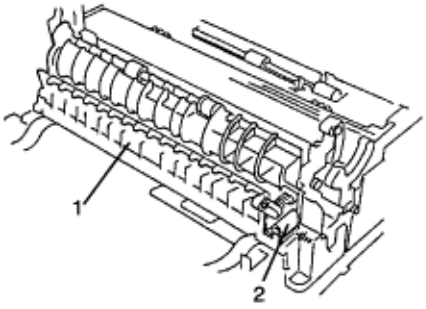

4) Stacker Cover

a) Open the copy stacker by pushing the buttons.

b) Disconnect the flat cable from the PC connector. Remove the LED head while spreading the retainer on the Copy Stacker.

c) Remove the Copy Stacker by pressing inward the two hooks until the copy Stacker is free from the two reset levers.

d) Remove the Copy Stacker by spreading it from the lower base.

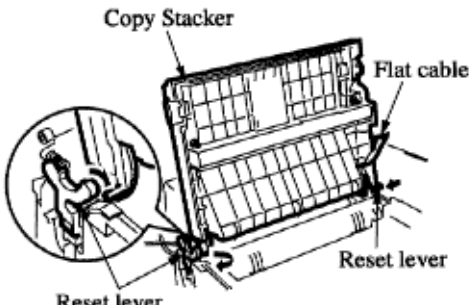

5) Fusing Unit

a) Remove the Fusing Unit by removing the four screws (2).

Note: The Copy Stacker Cover must be removed first.

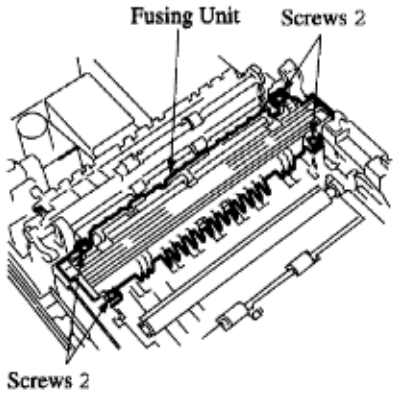

6) Manual Feed Assembly (only OKIFAX 2350/2450)

a) First, carry out the disassembly procedure up to the point of Main Cover removal. **(Refer to sub-section 4.2.2).**

b) Remove the Manual Feed Assembly by flexing it down, and then pressing inward on the two retainers.

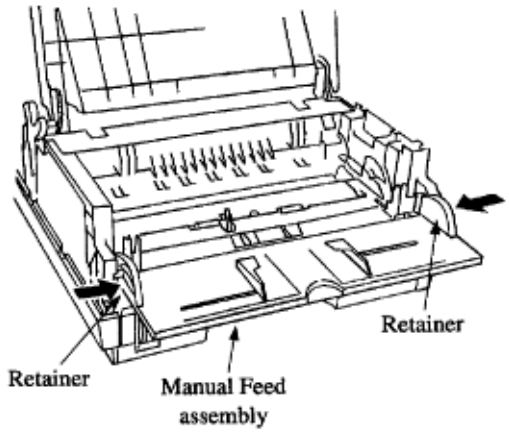

Copyright 1997, Okidata, Division of OKI America, Inc. All rights reserved. See the OKIDATA Business Partner Exchange (BPX) for any updates to this material. (http://bpx.okidata.com)

4.2.6 Lower Base, Motor Assembly, Back-up Roller, Transfer Roller, Reset Levers

(1) Disassembly procedure

1) Lower Base, Motor Assembly

a) First, carry out the disassembly procedure up to, but not including, the point of the Fusing Unit removal. **(Refer to sub-item 4.2.4).**

b) Disconnect the two motor connectors, and the LED head connector (CN2, CN3 and CN4 on the MCNT board).

c) Remove the Lower Base by removing the seven screws (1) to (3). (not all illustrated).

- Two screws securing the Motor Assembly (3).
- Four screws securing each corner of the lower base (2).
- One Screw securing the center of the lower base (3).

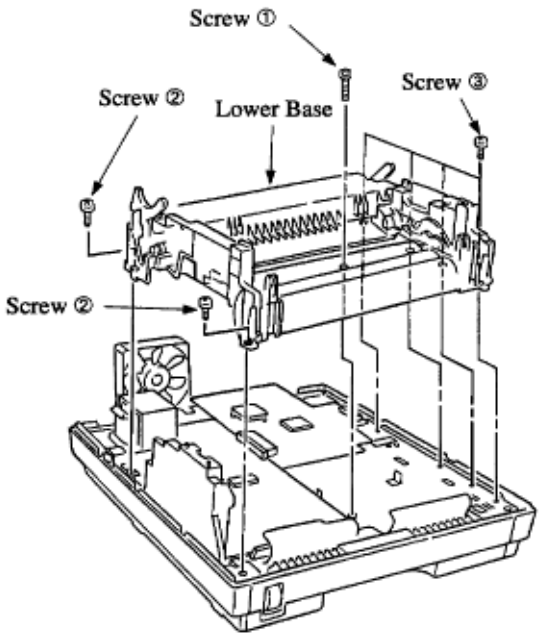

d) Press up and hold the two latches while removing the Motor Assembly out.

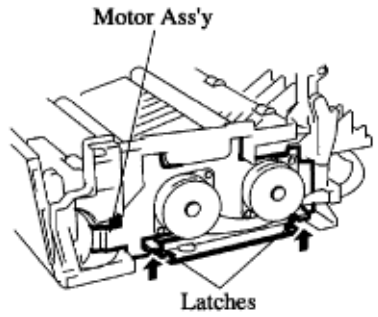

2) Back-up Roller, Reset Levers

After removing the Lower Base:

a) Use a needle nose pliers to remove the stacker cover reset spring (1).

b) Press down on the back-up (pressure) rollers (4) to release the tension on the left and right reset levers.

c) Remove the left reset lever (2).

d) Remove the right reset lever (3).

e) Lift the back-up (pressure) roller (4) at A and slide it in the direction of arrow B and remove the roller, using care not to lose the bushings, washers or springs.

f) Remove the fuser roller idle gear (5).

g) Remove the stacker cover damper gear (6).

h) Remove the cover open switch arm from the left reset lever.

i) Remove the stacker cover damper arm (7).

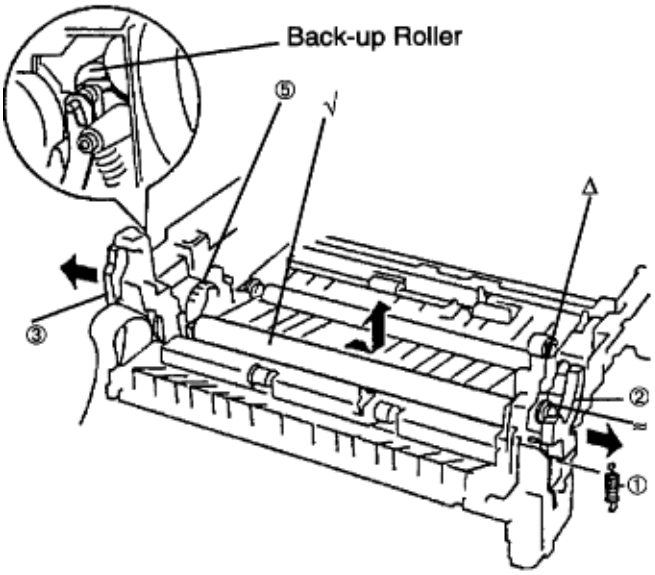

3) Transfer Roller

Caution: Do NOT touch the transfer roller! Touching the transfer roller may cause incomplete toner transfer, resulting in faded output.

a) Use extreme care when lifting the transfer roller. The left bearing will break if too much twist or pressure is applied.

b) Power OFF the unit and detach the AC power cord.

c) Remove the image drum cartridge, wedge the blade between the transfer roller gear on the base frame.

d) Using a flat-blade screwdriver, wedge the blade between the transfer roller gear and the base frame.

e) Gently pry the transfer gear and roller from the well.

f) Use the screwdriver to support the transfer roller under its shaft.

g) Do NOT lift the roller more than an inch to access the gear and bearing.

h) Remove both the transfer roller gear (1) and bearing.

i) Remove the transfer roller (2) by sliding it to the right and then out.

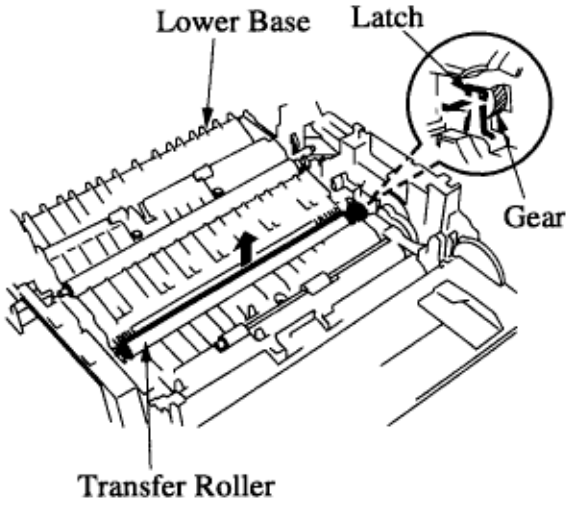

(2) Reassembly procedure

Reverse the disassembly procedures.

Copyright 1997, Okidata, Division of OKI America, Inc. All rights reserved. See the OKIDATA Business Partner Exchange (BPX) for any updates to this material. (http://bpx.okidata.com)

4.2.7 Registration Roller, Hopping Roller, Sensor Plates

(1) Disassembly procedure

1) Registration Roller, Hopping Roller

a) First, carry out the disassembly procedure up to the point of the Lower Base removal. **(Refer to sub-item 4.2.6).**

b) Remove the One-way Clutch Gear.

c) Press the Registration Roller to the right side and lift up the left side of it, then remove the Registration Roller.

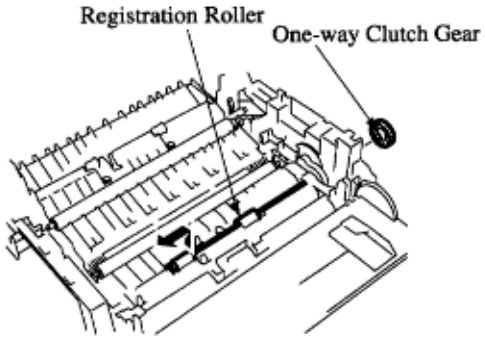

d) Remove the One-way Clutch Gear and Bearing.

e) Remove the Hopping Roller by sliding to the right side, and then lifting out.

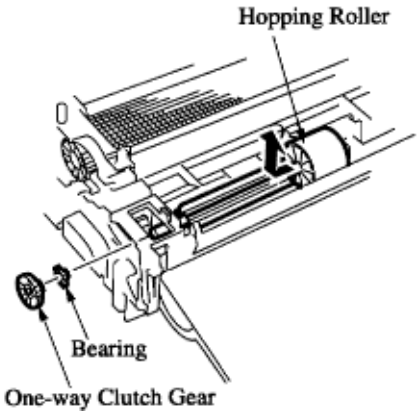

2) Sensor Plates (Inlet, Outlet), Toner Sensor

a) After removing the Lower Base, remove the Sensor Plate by pressing and holding the latches (1) while shifting the Sensor Plate up and out.

Note: The metal "Sensor Wire Assembly" should also be removed when removing the outlet sensor plate.

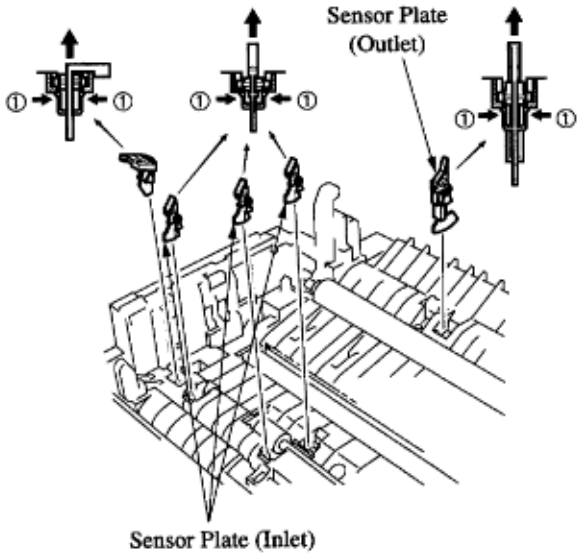

b) Press and hold the latches (1) while pushing the Toner Sensor up and out.

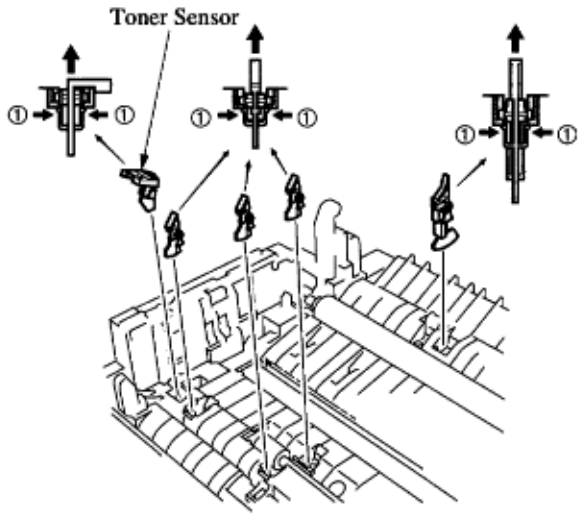

(2) Reassembly procedure

Reverse the disassembly procedures.

Copyright 1997, Okidata, Division of OKI America, Inc. All rights reserved. See the OKIDATA Business Partner Exchange (BPX) for any updates to this material. (http://bpx.okidata.com)

4.2.8 MCNT Board, Power Supply Unit, Contact Assembly, Transformer

(1) Disassembly procedure

The Main Control PCB (R054/R050, R175, R175-2) and Power Supply Unit can be easily accessed by removing the scanner and printer as whole assemblies. Use the following disassembly procedure.

1) Initial steps

a) First, Remove the Drum, Rear Cover, NCU Cover, Main Cover, Separation Plate, NCU Board and Modem Board (2350/2450). **Refer to sub-section 4.2.3**.

Note: MCNT board is shown below:

Okifax 1050	R054/R050 board
Okifax 2350	R175 board
Okifax 2450	R175-2 board

b) Remove the Scanner Unit as a whole assembly by removing its three screws. **(Refer to first illustration shown in subsection 4.2.4).** Do not remove the Control Panel or Paper Guide U Assemblies.) Then remove the appropriate connectors from the MCNT board.

c) Remove the printer unit as a whole assembly by removing the seven screws.

- Two screws securing the motor assembly.
- Four screws securing each corner of the lower base assembly.
- One screw securing the center of the lower base assembly.

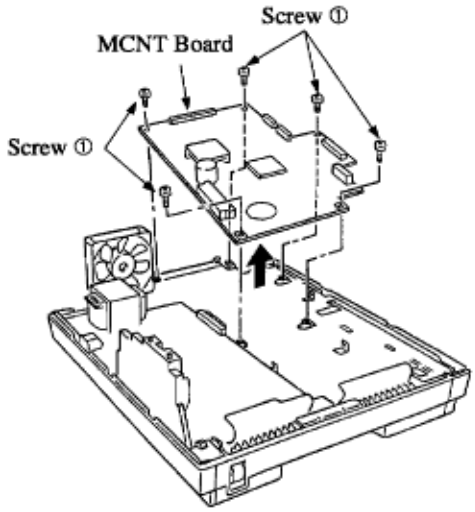

2 MCNT board (for OKIFAX 1050)

a) Remove the MCNT Board by removing the five screws (1).

MCNT Board (for OKIFAX 2350/2450)

a) Remove the MCNT Board by removing the five screws (2).

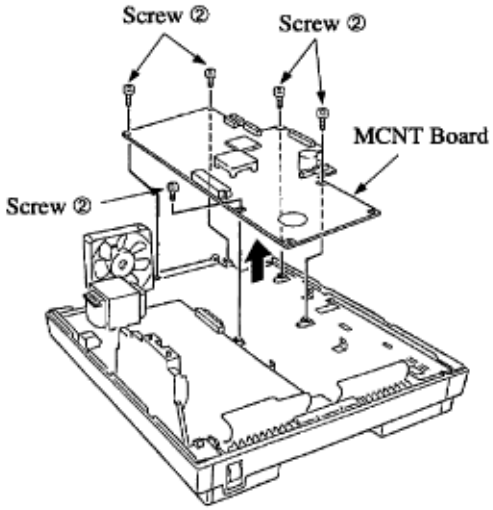

3) Power Supply Unit and Contact Assembly

a) Disconnect the two connectors from the Transformer.

b) Remove the Power Supply Unit by removing the three screws (3) and the screw (4) on the frame ground wire.

c) Carefully separate the Power Supply Unit from the Contact Assembly.

4) Transformer

a) Remove the Support Plate by removing one screw (5).

b) Remove the Transformer by disconnecting the two connectors.

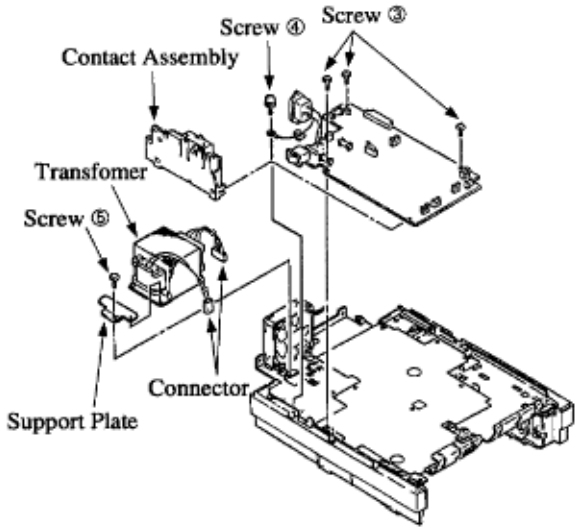

(2) Reassembly procedure

Reverse the disassembly procedures.

Copyright 1997, Okidata, Division of OKI America, Inc. All rights reserved. See the OKIDATA Business Partner Exchange (BPX) for any updates to this material. (http://bpx.okidata.com)

5.1 Setting of LED Print Head Drive Time

Adjustment point: Technical Functions No. 28 through 31.
* To access the Technical Function mode, press SELECT FUNCTION key once, COPY key twice and "2" key (When no messages are in memory).

Adjustment:
1) Turn AC power ON.
2) Set the LED print head to the appropriate ranking by following Table 5.1.1 below.
3) Intensity ranking is determined by the first, second and third digits from the right in the LED print head serial number (i.e. in S/N ---XX056, 056 is the intensity ranking.) In each row there is a rank marking range (left most column). The ranking printed on the LED head should fall within one of these ranges. After locating the appropriate range, follow the row right to the asterisk column. Follow the asterisk column vertically to see the appropriate technical function settings.
4) Set technical functions 28 through 31 according to the recommended values.

Table 5.1.1 Setting of Technical Function No. 28 to 31

Technical Function / Rank Marking	No. 31	0	1	0	1	0	1	0	1	0	1	0	1	0	1	0	1
	No. 30	0	0	1	1	0	0	1	1	0	0	1	1	0	0	1	1
	No. 29	0	0	0	0	1	1	1	1	0	0	0	0	1	1	1	1
	No. 28	0	0	0	0	0	0	0	0	1	1	1	1	1	1	1	1
~056		*															
057 ~ 063			*														
064 ~ 071				*													
072 ~ 080					*												
081 ~ 090						*											
091 ~ 101							*										
102 ~ 113								*									
114 ~ 127									*								
128 ~ 143										*							
144 ~ 160											*						
161 ~ 180												*					
181 ~ 202													*				
203 ~ 227														*			
228 ~ 256															*		
257 ~ 287																*	
288 ~																	*

0: OFF
1: ON

Note: When the rank marking of the replaced LED print head (new part) is the same as that of the used LED print head (old part), you do not always have to set the LED print head drive time.

Copyright 1997, Okidata, Division of OKI America, Inc. All rights reserved. See the OKIDATA Business Partner Exchange (BPX) for any updates to this material. (http://bpx.okidata.com)

5.2 Power Voltage (Confirmation)

The power voltage of the machine are not adjustable. However, their measurement procedures are described here for the confirmation of each voltage. It is not possible to measure the +8VDC, and +30VDC voltages.

5.2.01 +5VDC Voltage

PC board name: R054/R050 (MCNT) board for OKIFAX 1050, R175 (MCNT) board for OKIFAX 2350 and R175-2 (MCNT) board for OKIFAX 2450. Measurement points: Ground terminal Specification: +5V ± 4% (+4.5V to 5.2V) Measuring equipment required: Digital voltmeter

Measurement

1) Turn AC power OFF. 2) Remove the rear cover and optional memory and/or PC Interface boards if installed. 3) Connect the digital voltmeter between the resistor and ground terminal (R66(OKIFAX 1050) or R52 (OKIFAX 2350/2450)). See Figure 5.2.1. 4) Turn AC power ON. 5) Make sure that the meter reads +4.5V to 5.2VDC.

* As an example, R054/R050 (MCNT) board of the OKIFAX 1050 is shown below. (Resistor R52 is located in the same area on the OKIFAX 2350/2450 MCNT board.)

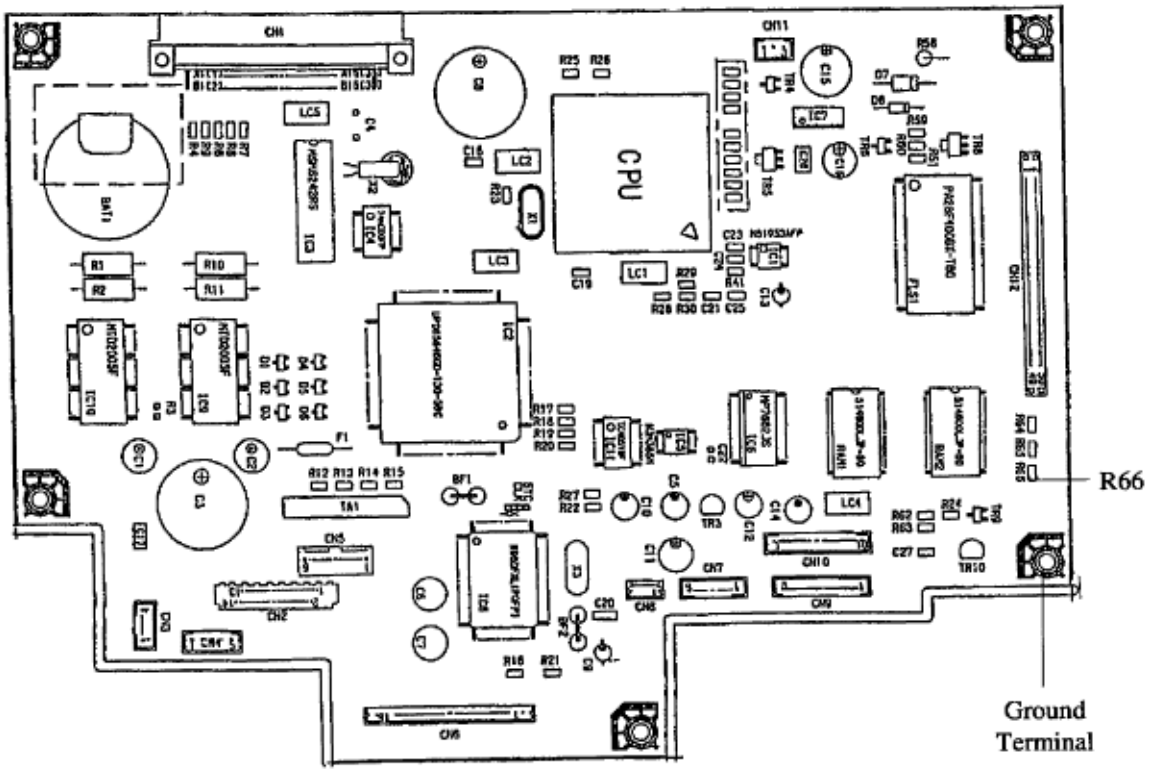

Figure 5.2.1 +5VDC Measurement Points on MCNT Board

Copyright 1997, Okidata, Division of OKI America, Inc. All rights reserved. See the OKIDATA Business Partner Exchange (BPX) for any updates to this material. (http://bpx.okidata.com)

5.3 Contact Image Sensor Output Check (Confirmation)

PC board name: R054/R050 (MCNT) board for OKIFAX 1050, R175 (MCNT) board for OKIFAX 2350 and R175-2 (MCNT) board for OKIFAX 2450. Measurement points: SIG signal, CN10-1 pin and ground terminal Specification: A waveform sample is shown below. (For FX-050) Measuring equipment required: Oscilloscope

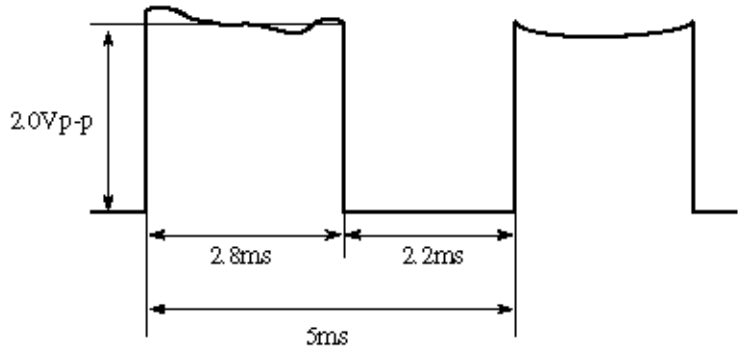

As an example, the (MCNT) board of the OKIFAX 1050 is shown below.

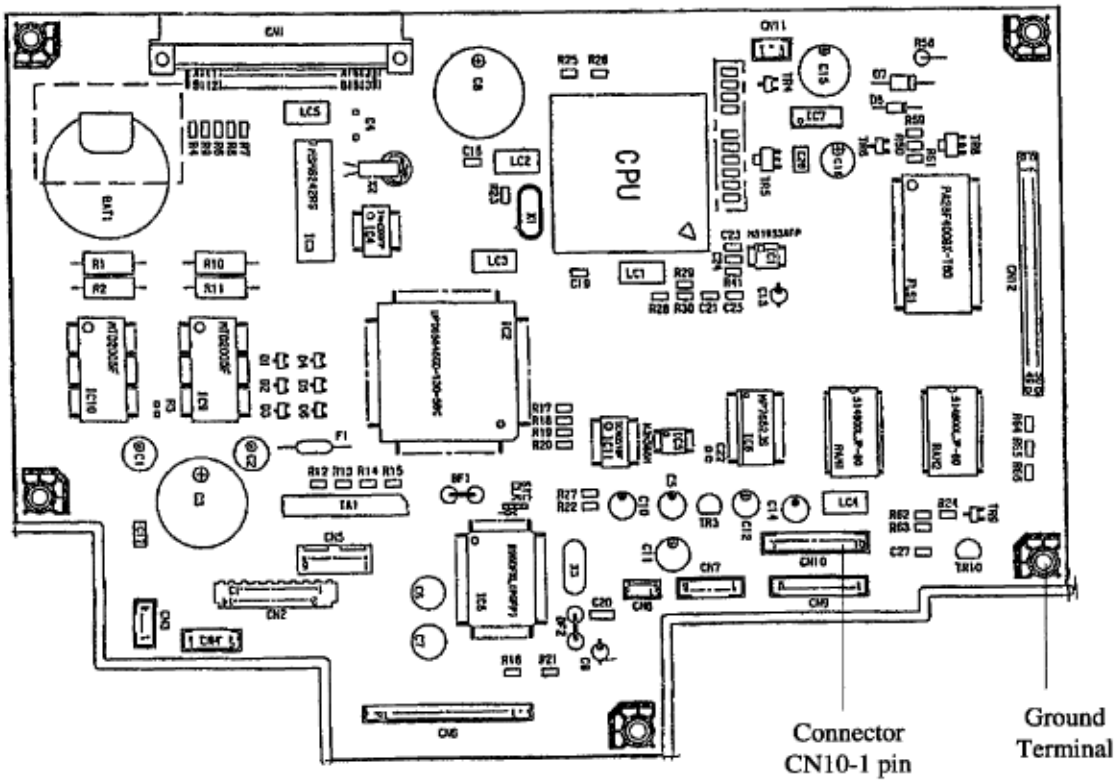

Figure 5.3.1 SIG Signal Measurement Points on MCNT Board

Copyright 1997, Okidata, Division of OKI America, Inc. All rights reserved. See the OKIDATA Business Partner Exchange (BPX) for any updates to this material. (http://bpx.okidata.com)

6.1 Replacement of Consumable Parts

The user (or service personnel) is required to replace the following items as consumable parts.

6.1.01 User side

No.	Part name	Expected Use Before Replacement	Reference Item No. in Fig.6.1.1
1	Toner Cartridge	1200 sheets (ITU-T document sample No. 1) (For the first toner cartridge to a new I/D Unit) 2500 sheets (ITU-T document sample No.1) (For the second or later cartridge to a new I/D Unit)	(1)
2	I/D Unit (Image drum unit)	Up to 20,000 pages	(2)

6.1.02 Service personnel side

No.	Part name	Expected Use Before Replacement	Reference Item No. in Fig.6.2.1
1	Fuser Unit	180,000 printed pages	(3)
2	Separation Rubber	Up to 30,000 documents fed	(4)

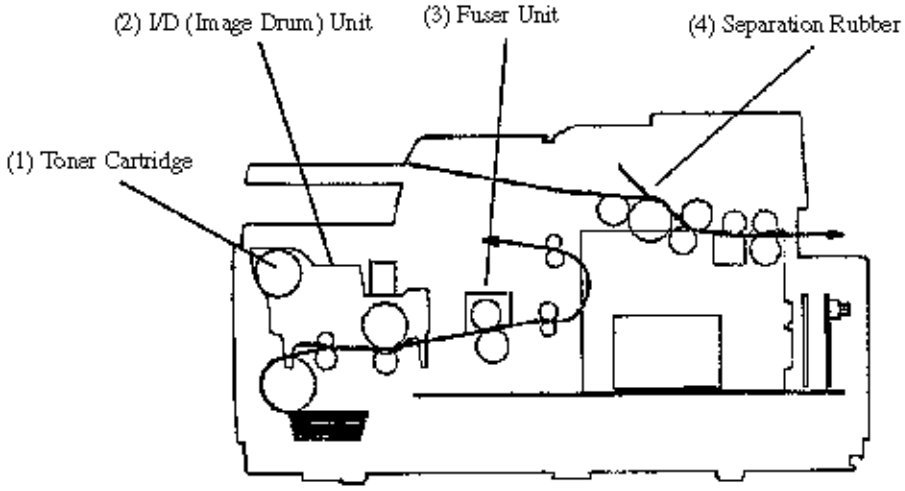

Figure 6.1.1 Consumable Parts

6.1.03 Others

Table 6.1.1 Reliability

No.	Item	Specifications
1	Document feeder	Jam occurrence and misfeeds in the automatic document feeder will be less than one in 500 operations for all specified documents.
2	Recording paper feeder	Jam occurrence in the automatic paper feeder will be less than one in 1,500 operations and misfeeds will be less than one in 500 operations for all specified recording paper.
3	Lithium Battery (system data backup)	The lithium battery is mounted on the MCNT board, and is not field replacable. The battery life is up to five years, and is not rechargeable.
4	NiCad Battery (Image Data Backup)	OKIFAX 2450 only. In the event of a power outage, the NiCad battery will retain the image data for a minimum of one hour. Observe the caution below for replacement. Okidata recommends the use of part #56306901 for replacement.
5	MTBF	The MTBF for the overall machine will exceed 3,000 hours of actual operation. The MTBF will be measured at a confidence level of 95% under controlled laboratory conditions. The MTBF will be based on 50% transmit and 50% receive activities.

CAUTION

Danger of explosion if battery is incorrectly replaced.

Replace only with the same or equivalent type recommended by the manufacturer. Dispose of used batteries according to the manufacturer's instructions.

Copyright 1997, Okidata, Division of OKI America, Inc. All rights reserved. See the OKIDATA Business Partner Exchange (BPX) for any updates to this material. (http://bpx.okidata.com)

6.2 Preventative Maintenance

Preventative maintenance of the following items should be performed semi-annually after the machine is installed (or whenever the machine requires service). The description of preventative maintenance is shown in Table 6.2.1.

Table 6.2.1 Preventative Maintenance

No.	Part Name	Procedure	Reference Item No. In Fig. 6.2.1
1	Scan Roller	Clean with water.	(1)
2	Feed Rollers No. 1 and No.2	Clean with water. If the surface of these rollers becomes dirty, the dirt could cause the transmitted image or the local copied image to expand vertically. Perform this cleaning as necessary.	(2)
3	Sub Roller	Clean with water.	(3)
4	Pinch Rollers	Clean with ethyl alcohol.	(4)
5	ADF Roller	Clean with water. If the surface of this roller becomes dirty, the dirt could cause misfeeding of documents. Perform this cleaning as necessary.	(5)
6	Contact Image Sensor	Check for accumulation of paper dust, etc. Clean with ethyl alcohol if necessary.	(6)
7	Separation Rubber	Clean with water. If this rubber is worn out, replace it. Otherwise replace once a year.	(7)
8	LED print head	Clean the surface of the head by moving an optical cleaning tissue back and forth several times.	(8)
9	Printer unit	Vacuum any toner or dust accumulation. Clean the inside of the printer unit by using a cloth dampened with cold water, if necessary. Dry completely.	

10	Lubrication	Lubrication should take place once a year, or as necessary. Use Dow Corning Molycoat BR-2 grease or equivalent. Use grease sparingly. Lubricate gears and reset lever channels. Do not allow lubricant to contact the surface of any rollers or paper guides. 10 Lubrication	
11	Cleaning	Clean the machine's covers with mild soap on a cloth dampened with cold water. Dry completely. ***Note:*** **Always disconnect the machine from power before cleaning.**	(9)
12.	Optical sensors	Vacuum any dust accumulation from both ADF and power supply optical sensors as necessary.	

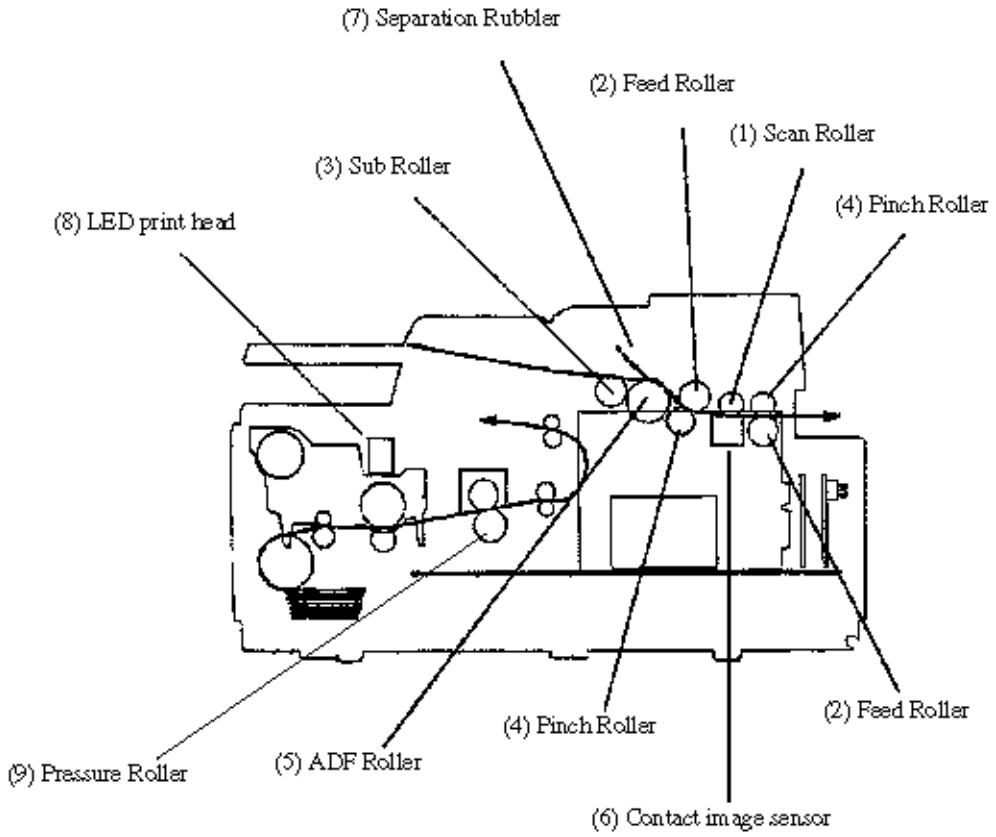

Figure 6.2.1 Parts of Routine Inspection

Copyright 1997, Okidata, Division of OKI America, Inc. All rights reserved. See the OKIDATA Business Partner Exchange (BPX) for any updates to this material. (http://bpx.okidata.com)

6.3 Printer Counter Display/Clear

6.3.01 Purpose A user can clear the image drum unit count and check some of the other counters (such as the print counter, scan counter) by using the ¬ key or ® key.

6.3.02 Procedure The following shows the case when the service bit has been set OFF.

Note: Clear Operation

Operations:

- To display the printer counters, press the SELECT FUNCTION key once and one-touch key No.7 in the standby mode. (If no message is in memory)
- Press the ← key or the → key.

*1: If the drum does not reach its life span.

The display shows:

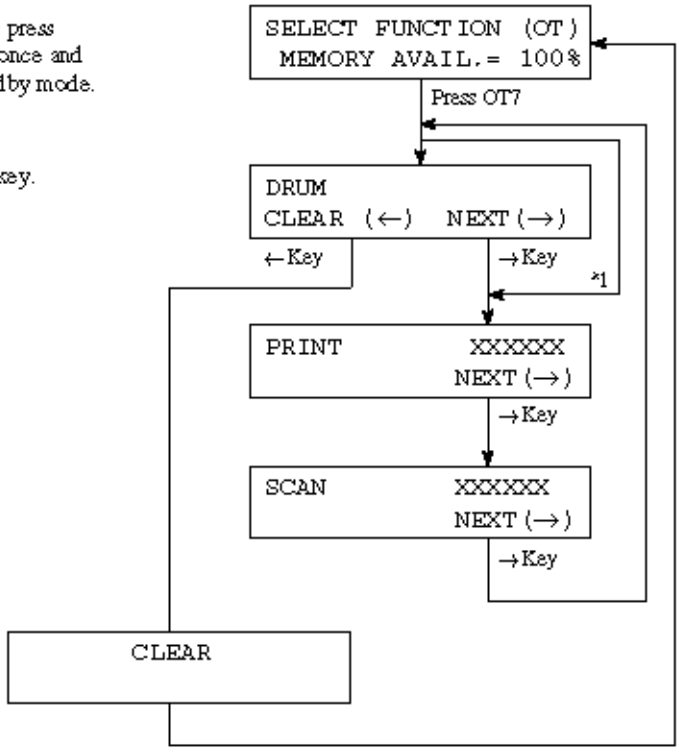

User can clear only DRUM counter. When the drum has reached its life span, LCD shows REPLACE I/D Unit. After having cleared the drum counter, warning message will be disappeared.

Copyright 1997, Okidata, Division of OKI America, Inc. All rights reserved. See the OKIDATA Business Partner Exchange (BPX) for any updates to this material. (http://bpx.okidata.com)

6.4 Printer Counter Display/Clear

6.4.01 Purpose The service personnel can clear and check the following counters: Image Drum Toner Image Drum (Total) Print Scan

6.4.02 Procedure The following shows the case when the service bit has been set ON.

Note: DRUM (T) will be used to know the total in-use life (printed page count) of the machine.

Operations:

- To perform a printer counter clear, press the SELECT FUNCTION key once and one-touch key No. 7 in the standby mode. (If no message is in memory)
- Press the ← key or the → key.

The display shows:

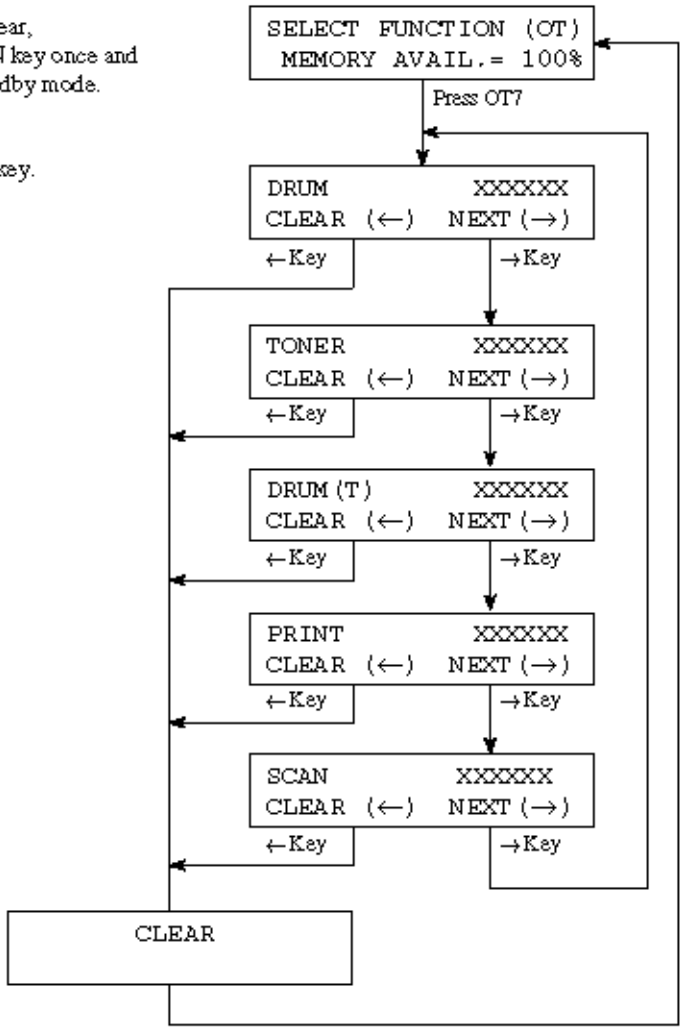

Copyright 1997, Okidata, Division of OKI America, Inc. All rights reserved. See the OKIDATA Business Partner Exchange (BPX) for any updates to this material. (http://bpx.okidata.com)

6.5 Self-diagnosis Test

6.5.01 Purpose To check ROMs, RAMs and printing function.

6.5.02 Procedure

Operations:

- To perform a self-diagnostic test, press the SELECT FUNCTION key once and the COPY key twice in the standby mode. (If no message is in memory)
- Press the ← key.
- Press the ← key.
- Press the ← key to activate self-diagnosis.
  * PC-I/F appears with PC-I/F board.

(Figure 6.5.1 shows the printed data.)

The display shows:

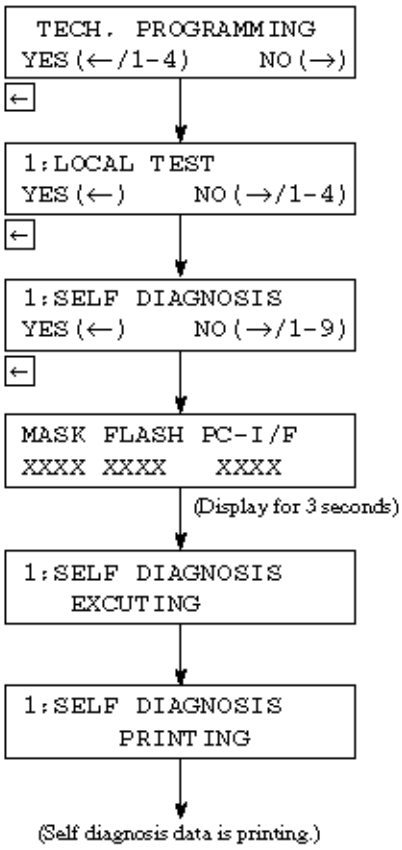

Test report will be automatically printed out with the following items:

OKIFAX 1050

a)	Pattern 1	Stair pattern (32 lines in each step)
b)	Pattern 2	All black (32 lines)
c)	Pattern 3	Alternate printing of black dots and white dots (32 lines x 2)

d)	CPU-ROM VERSION CPU-ROM	In case CPU-ROM is good. In case CPU-ROM is not good.	HASH OK HASH NG
	CPU-RAM	In case CPU-RAM is good. In case CPU-RAM is not good.	OK NG
e)	FLASH VERSION FLS1	In case FLS1 is good. In case FLS1 is not good.	HASH OK HASH NG
f)	FLASH VERSION LANGUAGE	In case LANGUAGE is good. In case LANGUAGE is not good.	HASH OK HASH NG
g)	DEFAULT VERSION DEFAULT	In case DEFAULT is good. In case DEFAULT is not good.	HASH OK HASH NG
h)	RAM1 RAM2	In case RAMi is good. In case RAMi is not good. ("i" is RAM's number)	OK NG
i)	OPT-RAM1 OPT-RAM2	In case OPT-RAMi is good. In case OPT-RAMi is not good. ("i" is RAM's number)	OK NG
j)	PC-I/F VERSION PC-I/F	In case PC-I/F is good. In case PC-I/F is not good.	HASH OK HASH NG

Figure 6.5.1 shows a printed sample.

Test report will be automatically printed out with the following items:

OKIFAX 2350/2450

a)	Pattern 1	Stair pattern (32 lines in each step)	
b)	Pattern 2	All black (32 lines)	
c)	Pattern 3	Alternate printing of black dots and white dots (32 lines x 2)	
d)	CPU-ROM VERSION CPU-ROM	In case CPU-ROM is good. In case CPU-ROM is not good.	HASH OK HASH NG
	CPU-RAM	In case CPU-RAM is good. In case CPU-RAM is not good.	OK NG
e)	FLASH VERSION FLS1	In case FLS1 is good.	HASH OK

f)	FLASH VERSION		
	LANGUAGE	In case LANGUAGE is good.	HASH OK
		In case LANGUAGE is not good.	HASH NG
g)	DEFAULT VERSION		
	DEFAULT	In case DEFAULT is good.	HASH OK
		In case DEFAULT is not good.	HASH NG
h)	RAM1	In case RAMi is good.	OK
	RAM2	In case RAMi is not good.	NG
	RAM3	("i" is RAM's number)	
i)	OPT-RAM1	In case OPT-RAMi is good.	OK
	OPT-RAM2	In case OPT-RAMi is not good.	NG
	OPT-RAM3	("i" is RAM's number)	
	OPT-RAM4		
j)	PC-I/F VERSION		
	PC-I/F	In case PC-I/F is good.	HASH OK
		In case PC-I/F is not good.	HASH NG

Figure 6.5.1 shows a printed sample.

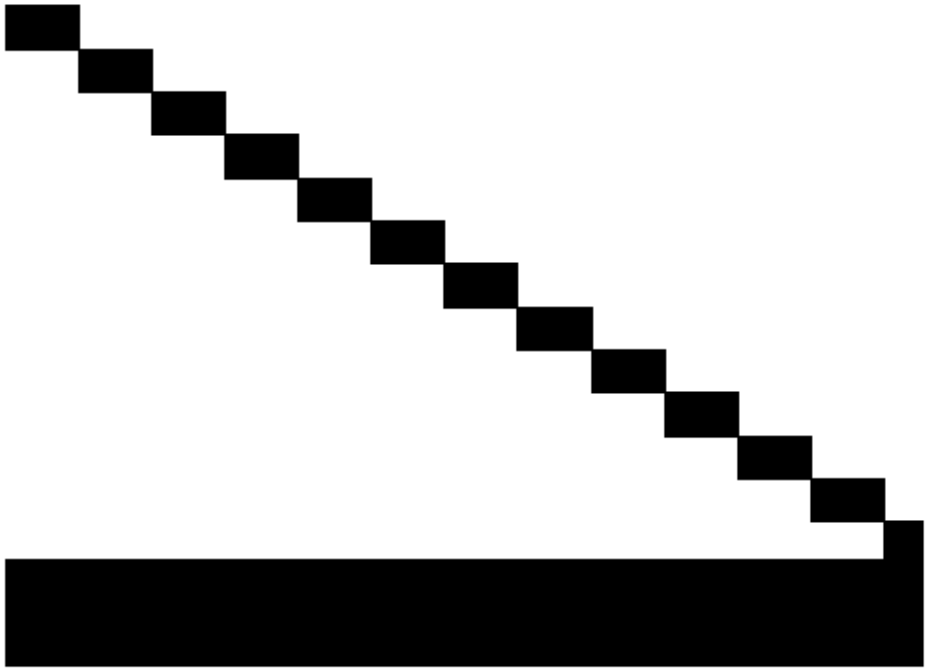

CPU-ROM	VERSION	Z106	
	HASH	OK	9CE1
CPU-ROM			
FLASH	VERSION	AA1	
FLS1	HASH	OK	27F4

LANGUAGE	VERSION	EG10		
	HASH	OK	4C38	
DEFAULT	VERSION	AD02		
RAM1	HASH	OK	F0FF	
RAM2		OK		
RAM3		OK	*1	*1 marked items are not printed for the OKIFAX 1050.
OPT-RAM1		OK	*2	
OPT-RAM2		OK	*2	*2 marked items are optional.
OPT-RAM3		OK	*2	
OPT-RAM4		OK	*2	
PC-I/F	VERSION	PP01	*2	
	HASH	OK	1507	

Figure 6.5.1 Self-diagnosis Data

Copyright 1997, Okidata, Division of OKI America, Inc. All rights reserved. See the OKIDATA Business Partner Exchange (BPX) for any updates to this material. (http://bpx.okidata.com)

6.6 Sensor Calibration Test

6.6.01 Purpose To adjust the linearity of output levels of contact image sensor.

Operations:

- To perform a sensor calibration test, press the SELECT FUNCTION key once and the COPY key twice in the standby mode. (If no message is in memory)
- Press the ← key.
- Press the ← key.
- Press the → key to activate self-diagnosis.

The display shows:

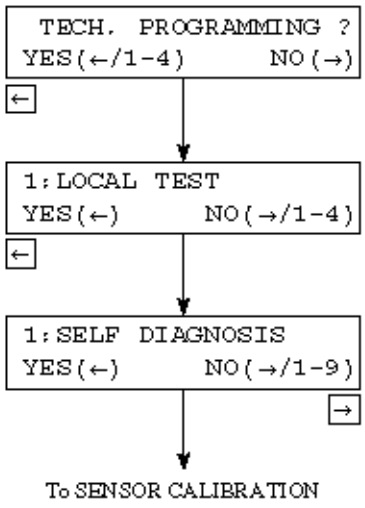

Operations:

- Enter "2".
- Press the ← key.
- Load document(s).
  For adjustment of levels, use NA Letter-size, plain, white bond paper.
- Press the ← key.
- Observe and check the document feed operation.
  Check that the following do not occur:
  Document skew.
  Multiple document feeding.
  No feeding.

The display shows:

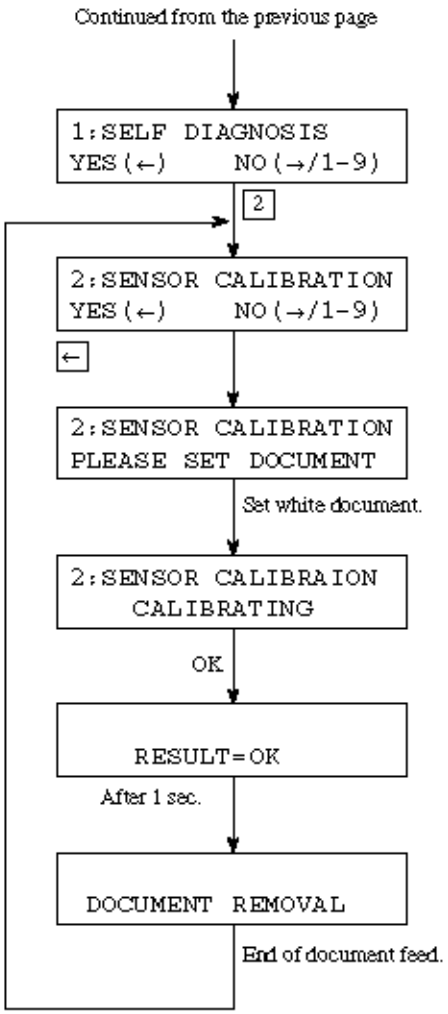

Note: After adjustment of levels, check the copy quality by copying test charts or documents.

Copyright 1997, Okidata, Division of OKI America, Inc. All rights reserved. See the OKIDATA Business Partner Exchange (BPX) for any updates to this material. (http://bpx.okidata.com)

6.7 LED Test

6.7.01 Purpose To check all LEDs on operation panel by lighting.

6.7.02 Procedure

Operations: **The display shows:**

- To perform an LED test, press the SELECT FUNCTION key once and the COPY key twice in the standby mode. (If no message is in memory)

```
TECH. PROGRAMMING ?
YES(←/1-3)      NO(→)
```

- Press the ← key.

```
1:LOCAL TEST
YES(←)      NO(→/1-4)
```

- Press the ← key.

```
1:SELF DIAGNOSIS
YES(←)      NO(→/1-9)
```

- Enter "3".

```
3:LED TEST
YES(←)      NO(→/1-9)
```

- Press the ← key.

```
3:LED TEST
      TESTING
```

- Observe and check that LEDs are blinking.
  - All LEDs will be sequentially turned on for one second in the following order.

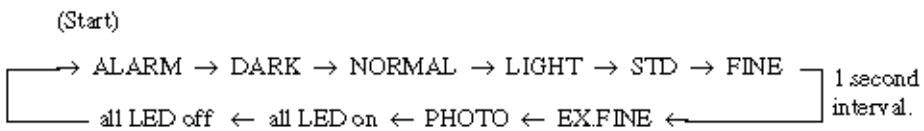

- After the checking, press the STOP key.

Copyright 1997, Okidata, Division of OKI America, Inc. All rights reserved. See the OKIDATA Business Partner Exchange (BPX) for any updates to this material. (http://bpx.okidata.com)

6.8 Tone Send Test

6.8.01 Purpose To send G3 tonal frequencies through the phone line for remote testing.

6.8.02 Procedure

Operations:

- To perform a tone send test, press the SELECT FUNCTION key once, the COPY key twice and the ← key twice. (If no message is in memory)
- Enter "4".
- Press the ← key.
- After the test, press the STOP key or end the transmission.

The display shows:

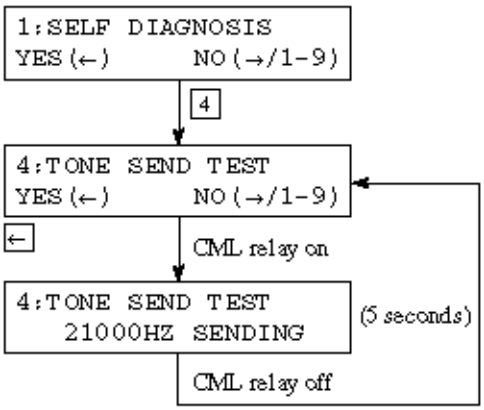

Copyright 1997, Okidata, Division of OKI America, Inc. All rights reserved. See the OKIDATA Business Partner Exchange (BPX) for any updates to this material. (http://bpx.okidata.com)

6.9 High-speed Modem Send Test

6.9.01 Purpose To check the telephone line quality in combination with a remote station programmed to the high-speed modem receive test mode.

6.9.02 Procedure

Operations:

- To perform a high-speed modify send test, press the SELECT FUNCTION key once, the COPY key twice and the [←] key twice. (If no message is in memory)
- Enter "5".
- Press the [←] key.
- Set MODEM rate with the [→] key.
- Press the [←] key. All zero data will be continuously sent.
- After the test, press the STOP key.

The display shows:

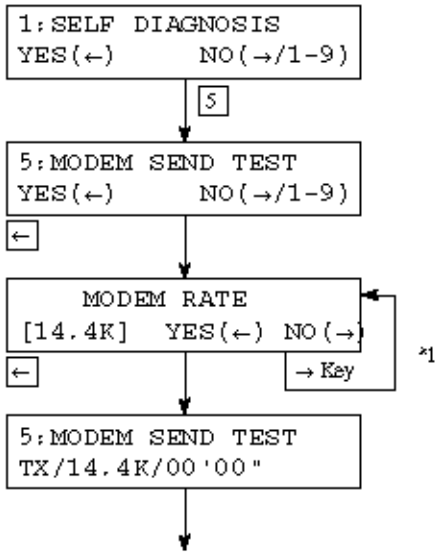

(For detail, see Fig. 6.9.1)

*1: → 14.4K → 12.0K → 9.6KT (V.17) → 7.2KT (V.17) → 9.6K (V.29) → 7.2K (V.29) → ← 0.3K ← 2.4K ← 4.8K

14.4K, 12.0K, 9.6KT (V.17) and 7.2KT (V.17) are skipped for the MODEM without 14.4kps function.

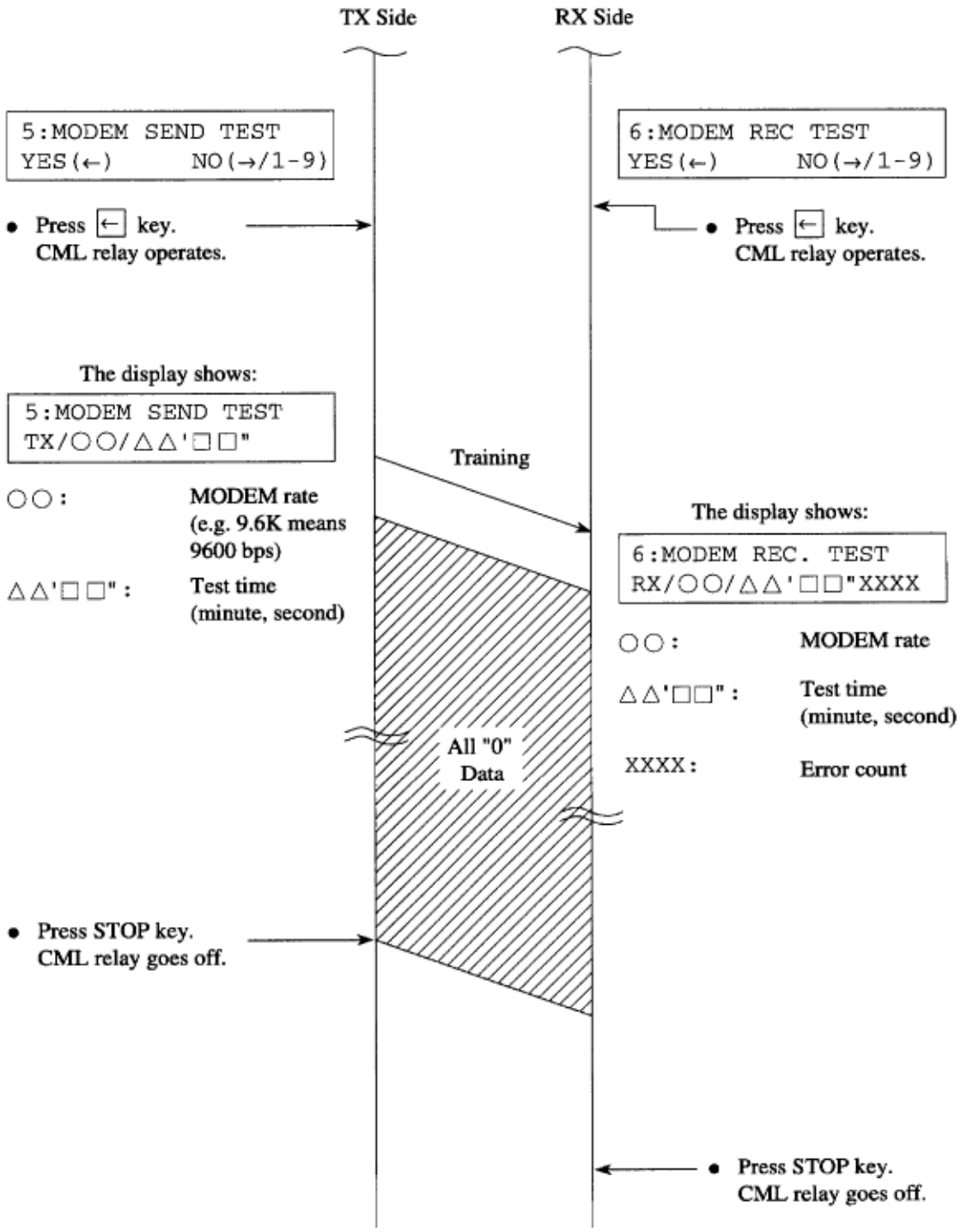

Copyright 1997, Okidata, Division of OKI America, Inc. All rights reserved. See the OKIDATA Business Partner Exchange (BPX) for any updates to this material. (http://bpx.okidata.com)

6.10 High-speed Modem Receive Test

6.10.01 Purpose To check the telephone line quality in combination with a remote station programmed to the high-speed modem send test mode.

6.10.02 Procedure

Operations:

- To perform a high-speed modem receive test, press the SELECT FUNCTION key once, the COPY key twice and the [←] key twice. (If no message is in memory)
- Enter 6.
- Press the [←] key.
- Set MODEM rate by the [→] key.
- Press the [←] key.
- After the test, press the STOP key.

The display shows:

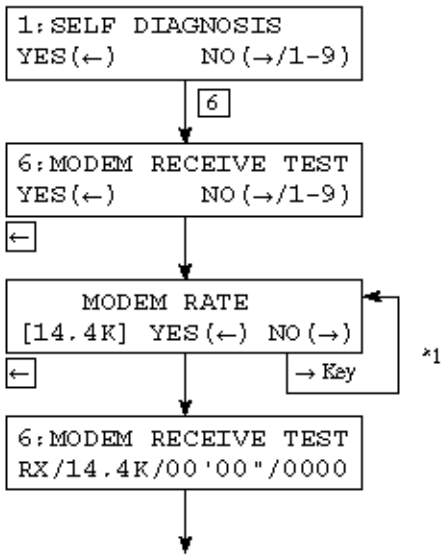

(For detail, see Fig. 6.9.1)

*1: → 14.4K → 12.0K → 9.6KT (V.17) → 7.2KT (V.17) → 9.6K (V.29) → 7.2K (V.29) → 4.8K ← 2.4K ←

14.4K, 12.0K, 9.6KT (V.17) and 7.2KT (V.17) are skipped for the MODEM without 14.4kps function.

Copyright 1997, Okidata, Division of OKI America, Inc. All rights reserved. See the OKIDATA Business Partner Exchange (BPX) for any updates to this material. (http://bpx.okidata.com)

6.11 MF Send Test

6.11.01 Purpose To send the multi-frequencies of tone dialing to the line.

6.11.02 Procedure

Operations:

- To perform an MF send test, press the SELECT FUNCTION key once, the COPY key twice and the ← key twice. (If no message is in memory)
- Enter 7.
- Press the ← key.
- Press 1, 2, 3, 4, 5, 6, 7, 8, 9, 0, * or the # key. MF tone corresponding to the key pressed will be sent until the next key is pressed.
- After the test, press the STOP key. Frequencies of MF tone are as follows:

1	697 Hz/1209 Hz
2	697 Hz/1366 Hz
3	697 Hz/1477 Hz
4	770 Hz/1209 Hz
5	770 Hz/1366 Hz
6	770 Hz/1477 Hz
7	852 Hz/1209 Hz
8	852 Hz/1366 Hz
9	852 Hz/1477 Hz
0	941 Hz/1366 Hz
*	941 Hz/1209 Hz
#	941 Hz/1477 Hz

The display shows:

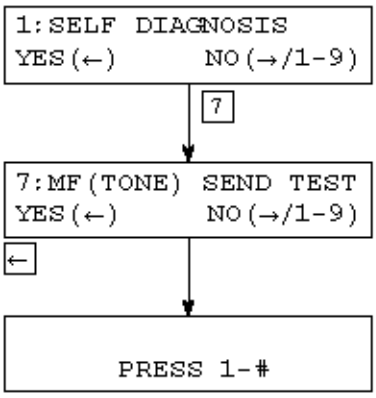

Copyright 1997, Okidata, Division of OKI America, Inc. All rights reserved. See the OKIDATA Business Partner Exchange (BPX) for any updates to this material. (http://bpx.okidata.com)

6.12 Tone (TEL/FAX)

6.12.01 Purpose To check the pseudo-ring back tone of TEL/FAX automatic switching.

6.12.02 Procedure

Operations:	The display shows:
• To perfrom a tone (TEL/FAX) test, press the SELECT FUNCTION key once, the COPY key twice and the ← key twice. (If no message is in memory)	1:SELF DIAGNOSIS YES(←) NO(→/1-9)
• Enter 8.	8
	8:TONE(TEL/FAX) TEST YES(←) NO(→/1-9)
• Press the ← key.	←
	8:TONE(TEL/FAX) TEST TONE SENDING
• After the test, press the STOP key.	

Copyright 1997, Okidata, Division of OKI America, Inc. All rights reserved. See the OKIDATA Business Partner Exchange (BPX) for any updates to this material. (http://bpx.okidata.com)

6.13 Printer Cleaning

6.13.01 Purpose This drum cleaning function removes the residual toner on the I/D (Image Drum) Unit surface. A printed page will carry the residual toner from the machine. This cleaning should be performed when print quality becomes questionable.

6.13.02 Procedure

Operations:	The display shows:
• To execute a printer cleaning cycle, press the SELECT FUNCTION key once, the COPY key twice and the ← key twice.	1: SELF DIAGNOSIS ? YES (←) NO (→/1-9)
	[9]
• Enter 9. In case of "No Paper" or "Cover Open" errors, the machine returns to standby state after 3 seconds.	9: PRINTER CLEANING YES (←) NO (→/1-9)
	[←]
• Press the ← key.	9: PRINTER CLEANING EXECUTING
	End of executing

Copyright 1997, Okidata, Division of OKI America, Inc. All rights reserved. See the OKIDATA Business Partner Exchange (BPX) for any updates to this material. (http://bpx.okidata.com)

6.14 Protocol Dump Data Printing

6.14.01 Purpose To analyze the transmitted/received G3 protocol signals. This data is useful when troubleshooting communications problems.

Copyright 1997, Okidata, Division of OKI America, Inc. All rights reserved. See the OKIDATA Business Partner Exchange (BPX) for any updates to this material. (http://bpx.okidata.com)

6.14.02 Procedure

Manual print-out of the last communication.

Note: The service bit (TF#1) must be ON to enable the Protocol Dump Report.

Operations:	The display shows:
• Press the SELECT FUNCTION key	14:14 [FAX] FUNCTION (Standby)
• Press one-touch key No.6	SELECT FUNCTION (OT) MEMORY AVAIL.=100% OT6
• Enter 5.	1:ACTIVITY REPORT YES(←) NO(→/1-5) 5
• Press the ← key.	5:PROTOCOL DUMP YES(←) NO(→/1-5) ←
	PROTOCOL DUMP PRINTING
	(Printing)

Copyright 1997, Okidata, Division of OKI America, Inc. All rights reserved. See the OKIDATA Business Partner Exchange (BPX) for any updates to this material. (http://bpx.okidata.com)

6.14.03 Dump data description

Data sample Figure shows the printed data as a sample.

PROTOCOL DUMP

05/19/95 09:21
ID=OKI SHIBAURA

DATA	TIME	S,R-TIME	DISTANT STATION ID	MODE	PAGES	RESULT	
05/19	09:16	00'46"	OKI DATA CORP.	CALLING	01	OK	0000

```
FCF
TX |          C2 C4  FD F4   DF
RX | 04 02 01     21    31
TX |
RX |

TX                                        DTC
DIS                                       00 00 00 00 00 00 00
00 00 00 00 00 00 00
DCS
00 00 00 00 00 00 00
NSF
00 00 00 00 00 00 00 00 00 00 00 00 00 00 00 00 00 00 00 00 00 00 00 00 00 00 00 00 00 00 00 00
00 00 00 00 00 00 00 00 00 00 00 00 00 00 00 00 00 00
NSS
FF CB C4 00 00 84 80 15 80 C4 40 B9 39 20 0C 0C 0C 0C 80 40 00 00 00 00 00 00 00 00 00 00 00 00
00 00 00 00 00 00 00 00 00 00 00 00 00 00 00 00 00 00 00 00 00 00 00 00 00 00 00 00 00 00 00 00
00 00 00 00 00 00 00 00 00 00 00 00 00 00 00 00 00 00 00 00 00 00 00 00 00 00 00 00 00 00 00 00
NSC
00 00 00 00 00 00 00 00 00 00 00 00 00 00 00 00 00 00 00 00 00 00 00 00 00 00 00 00 00 00 00 00
00 00 00 00 00 00 00 00 00 00 00 00 00 00 00 00 00 00


RX
DIS
FF CB 01 00 73 17 22 00 00 00 00 00 00 00 00 00 00 00 00
DTC
00 00 00 00 00 00 00 00 00 00 00 00 00 00 00 00 00 00 00
DSC
00 00 00 00 00 00 00 00 00 00 00 00 00 00 00 00 00 00 00
NSF
FF C0 04 00 00 84 80 20 40 C6 DC C0 FB 7D 87 20 0C 0C 0C 0C 80 20 40 82 80 10 FE 80 C0 E0 17 C0
2D C0 80 80 80 60 80 80 40 AC 00 00 00 00 00 00 00 00 00 00 00 00 00 00 00 00 00 00 00 00 00 00
00 00 00 00 00 00 00 00 00 00 00 00 00 00 00 00 00 00 00 00 00 00 00 00 00 00 00 00 00 00 00 00
00 00 00 00 00 00 00 00 00 00 00 00 00 00 00 00 00 00 00 00 00 00 00 00 00 00 00 00 00 00 00 00
NSS
00 00 00 00 00 00 00 00 00 00 00 00 00 00 00 00 00 00 00 00 00 00 00 00 00 00 00 00 00 00 00 00
00 00 00 00 00 00 00 00 00 00 00 00 00 00 00 00 00 00 00 00 00 00 00 00 00 00 00 00 00 00 00 00
00 00 00 00 00 00 00 00 00 00 00 00 00 00 00 00 00 00 00 00 00 00 00 00 00 00 00 00 00 00 00 00
NSC
00 00 00 00 00 00 00 00 00 00 00 00 00 00 00 00 00 00 00 00 00 00 00 00 00 00 00 00 00 00 00 00
00 00 00 00 00 00 00 00 00 00 00 00 00 00 00 00 00 00 00 00 00 00 00 00 00 00 00 00 00 00 00 00
00 00 00 00 00 00 00 00 00 00 00 00 00 00 00 00 00 00 00 00 00 00 00 00 00 00 00 00 00 00 00 00


RECEIVED CSI/CIG/TSI
FF C0 02 8C 8C 8C 4C 2C AC 2C 04 04 04 04 04 04 04 04 04 04 04 04 04
TRANSMITTED CSI/CIG/TSI
FF C0 02 6C 4C 1C CC 9C 6C EC 04 04 04 04 04 04 04 04 04 04 04 04 04
```

Figure 6.14.1 Protocol Dump Data (Sample: at transmitter side)

Copyright 1997, Okidata, Division of OKI America, Inc. All rights reserved. See the OKIDATA Business Partner Exchange (BPX) for any updates to this material. (http://bpx.okidata.com)

6.14.04 Analysis from the data

The printed out data permits to analyze G3 facsimile communication protocol signals between two facsimile machines. Figure 6.14.2 shows the result of an analysis on the printed data referring to Figure 6.14.1 (Protocol dump data).

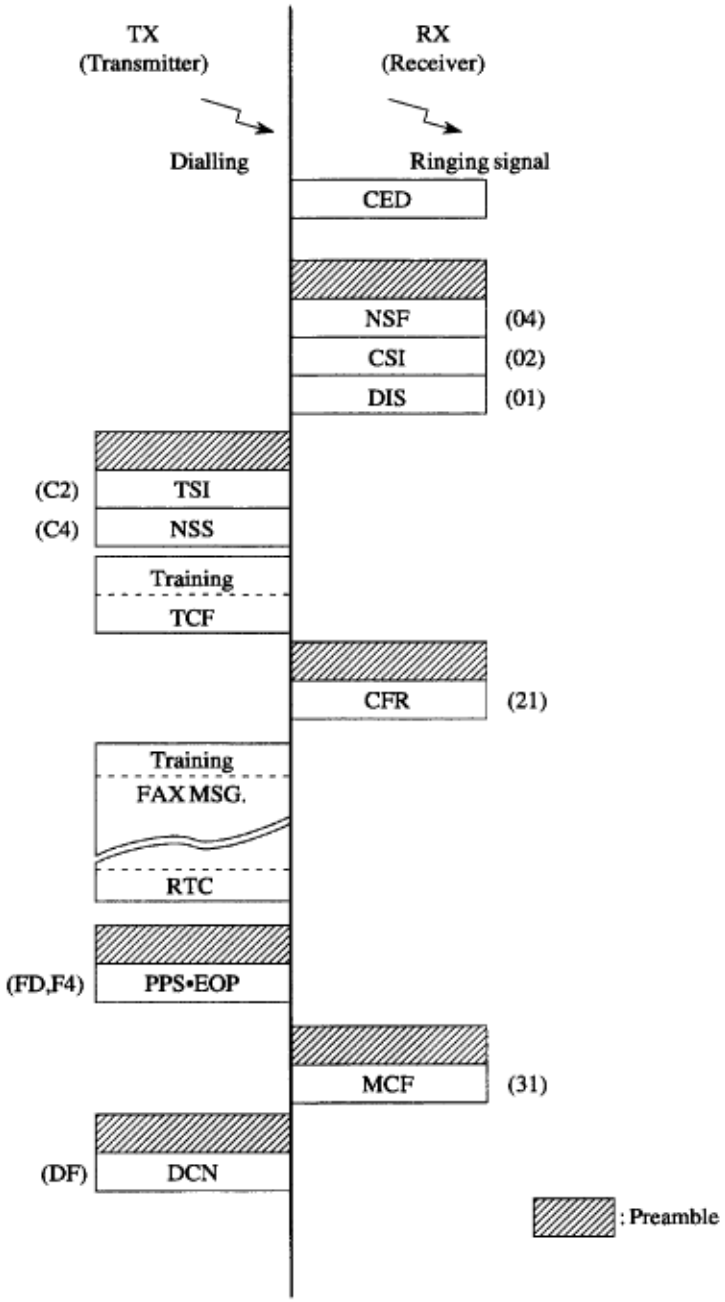

Figure 6.14.2 Result of Analysis (Example)

Copyright 1997, Okidata, Division of OKI America, Inc. All rights reserved. See the OKIDATA Business Partner Exchange (BPX) for any updates to this material. (http://bpx.okidata.com)

6.14.05 FCF (Facsimile Control Field) conversion table

Table 6.14.1 shows all FCF signals which are needed to analyze the printed out protocol dump data.

Some signals have two different hexadecimal codes in accordance with the calling party or called party.

Table 6.14.1 FCF Signals Conversion Table

Abbreviation	Hex. Codes	Description of function
NSF	04	Non-Standard Facilities
CSI	02	Called Subscriber Identification
DIS	01	Digital Identification Signal
NSC	84	Non-Standard Facilities Command
CIG	82	Calling Subscriber Identification
DTC	81	Digital Transmit Command
NSS	44 C4	Non-Standard Set-Up
TSI	42 C2	Transmitting Subscriber Identification
DCS	41 C1	Digital Command Signal
CFR	21 A1	Confirmation to Receive
MCF	31 B1	Message Confirmation
FTT	22 A2	Failure to Train
MPS	72 F2	Multi-Page Signal
EOM	71 F1	End of Message
EOP	74 F4	End of Procedure
RTP	33 B3	Retrain Positive
RTN	32 B2	Retrain Negative
PIP	35 B5	Procedure Interrupt Positive
PIN	34 B4	Procedure Interrupt Negative
PRI-MPS	7A FA	Procedure Interrupt-MPS
PRI-EOM	79 F9	Procedure Interrupt-EOM

PRI-EOP	7C FC	Procedure Interrupt-EOP
DCN	5F DF	Disconnect
CRP	58 D8	Command Repeat
CTC	48 C8	Continue to Correct
CTR	23 A3	Response to Continue to Correct
EOR	73 F3	End of Retransmission
ERR	38 B8	Response to End of Retransmission
FCD	60	Facsimile Coded Data
PPS	7D FD	Partial Page Signal
PPR	3D BD	Partial Page Request
RCP	61	Return to Control for Partial Page
RNR	37 B7	Receiver not Ready
RR	76 F6	Receiver Ready

Copyright 1997, Okidata, Division of OKI America, Inc. All rights reserved. See the OKIDATA Business Partner Exchange (BPX) for any updates to this material. (http://bpx.okidata.com)

6.15 System Reset

6.15.01 Purpose

To clear or initialize the following data: (a) Location data (b) Configuration data (default)

6.15.02 Procedure

Operations:

- To perform a system reset, press the SELECT FUNCTION key, the COPY key twice, the ← key and the → key. (If no message is in memory)
- Enter 3.

Note: ALL DATA CLEAR will initialize both location data and configuration data. Before performing an ALL DATA CLEAR, be sure to print a copy of the current configuration, when possible, to use as a reference.

The display shows:

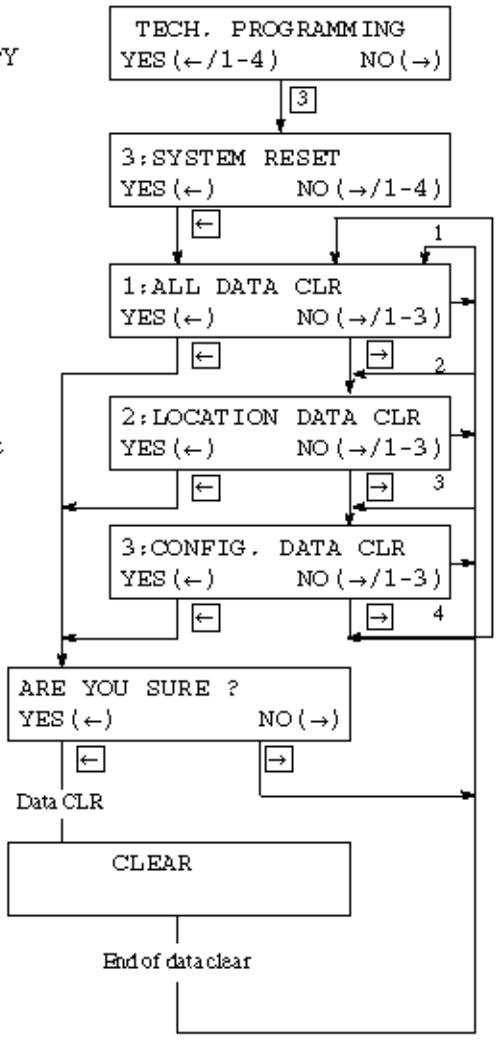

Copyright 1997, Okidata, Division of OKI America, Inc. All rights reserved. See the OKIDATA Business

Partner Exchange (BPX) for any updates to this material. (http://bpx.okidata.com)

6.16 Service Code

6.16.01 The service code can be printed on Activity Report to recognize the result of each communication.

6.16.02 The activity report indicates the code 0000", should a communication terminates on normal status as a service code.

6.16.03 The activity report indicates one of the codes of 90XX, should a communication terminates on abnormal status, as an error code.

6.16.04 Besides the above codes of 90XX, the following codes are prepared for identifying an abnormal status in details.

-21XX: For error codes in Group 3 transmission phase B
-29XX: For error codes in Group 3 reception phase B
-39XX: For error codes in Group 3 reception phase C
-41XX: For error codes in Group 3 transmission phase D
-49XX: For error codes in Group 3 reception phase D

Table 4.16.1 (1/2) Service Code List

Code	Description
0000	Successful end of communication.
1080	STOP key has been pressed while calling a remote fax.
10A2	Busy tone detected.
14C0	Dial tone not detected.
14C1	Line current not detected.
14C2	Calling-and-waiting for line connection time out.
14C3	Dialing limit time out.
21A0	Received signal other than DIS/DTC.
21A1	Contents of received DIS/DTC are faulty.
21A3	Each time there is no response from the receiver for sending TCF three times.
21A4	TCF fall back is not possible.
21A5	Received signal other than the desired signal in response to sending TCF.

21B0	Transmitter tried to transmit by confidential transmission function but the remote fax has not the capability of confidential reception.
21B1	Transmitter tried to transmit by Broadcast Initiate function but the remote fax has not the broadcast capabil-ity.
21C0	In Closed Network setting, TSI/CIG/CSI is either not received or, if received, it is not authorized one.
29B6	In Confidential Reception, the mail box specified by transmitter is not set up and open.
29C1	In Closed Network setting, TSI/CSI is either not received or, if received, it is not authorized one.
39A0	The number of continuous-error lines have exceeded the specified limit.
39A1	The number of random-error lines have exceeded the specified limit.
39B0	Memory Overflow has occurred while receiving in memory.
39B1	Memory Overflow occurred during Confidential Reception.
39C0	DECODER hardware error. (cannot reproduce picture)
39C1	DECODER hardware error. (cannot detect end of picture)
41A0	There was no response each time in response to the three post commands.
41A6	Received signal other than the desired signal in response to the post command.
41A9	Fall back in Phase C is not possible.
41AA	Received PIN for the post command.
41C8	T5 time out.
41CE	Received negative signal in response to the post command.
49CC	Received signal other than the desired signal in response to RNR.
49CD	Command not received in response to RNR.
60A0	Broadcast completed.
6803	DCN received in response to NSF/DIS without sending a single picture.
9080	Pressed STOP key.
9081	T1 time out.
9082	T2 time out.
9083	T3 time out.
9084	No recording paper.

9087	Document jam.
9088	60-minute or 70-minute time out.
9089	Document length has exceeded its maximum limit.
908E	Recording paper jam.
9090	Received DCN.
90B1	Picture memory hash error.
90C1	Document removed prior to transmission.
90C6	Normal or error-free lines not received for 13 seconds.
90C7	Error frame protocol received.
90D4	Hardware error in transmission system. (response of modem not detected)
90D5	ENCODER error. (Picture storage fault)
90F0	Option (2'nd tray) error.
90F1	Fan motor error.
90F2	Fuser error.
90F3	Recording paper size error.
90F4	Cover open.

Copyright 1997, Okidata, Division of OKI America, Inc. All rights reserved. See the OKIDATA Business Partner Exchange (BPX) for any updates to this material. (http://bpx.okidata.com)

General

This chapter contains:

(a) Troubleshooting flow charts related to general operations
(b) Troubleshooting flow charts by test operations
(c) Troubleshooting flow charts placing an emphasis on mechanical portions

Section No.	Name of Flow Chart	(a)	(b)	(c)	Page
7.1	Overall troubleshooting flow chart	O	O		7-2
7.2	No LCD operation	O			7-3
7.3	ALARM LED on	O			7-4
7.4	Printing test failure	O	O		7-5
7.5	No local copy	O	O		7-6
7.6	Auto dial failure	O			7-7
7.7	Transmission problem	O			7-8
7.8	Auto reception failure	O			7-9
7.9	Reception problem	O			7-10
7.10	Sensor calibration test		O		7-11
7.11	LED test		O		7-12
7.12	Tone send test		O		7-13
7.13	High-speed modem test		O		7-14 7-15
7.14	MF (Tone) send test		O		7-16
7.15	Tone (TEL/FAX) send test		O		7-17
7.16	No acoustic line monitor	O			7-18
7.17	Power supply unit	O			7-19
7.18	No document feeding			O	7-20
7.19	Multiple document feeding			O	7-21
7.20	Document skew			O	7-22

7.21	Document jam			O	7-24
7.22	Printer unit				7-25

Copyright 1997, Okidata, Division of OKI America, Inc. All rights reserved. See the OKIDATA Business Partner Exchange (BPX) for any updates to this material. (http://bpx.okidata.com)

7.1 Overall Troubleshooting Flow Chart

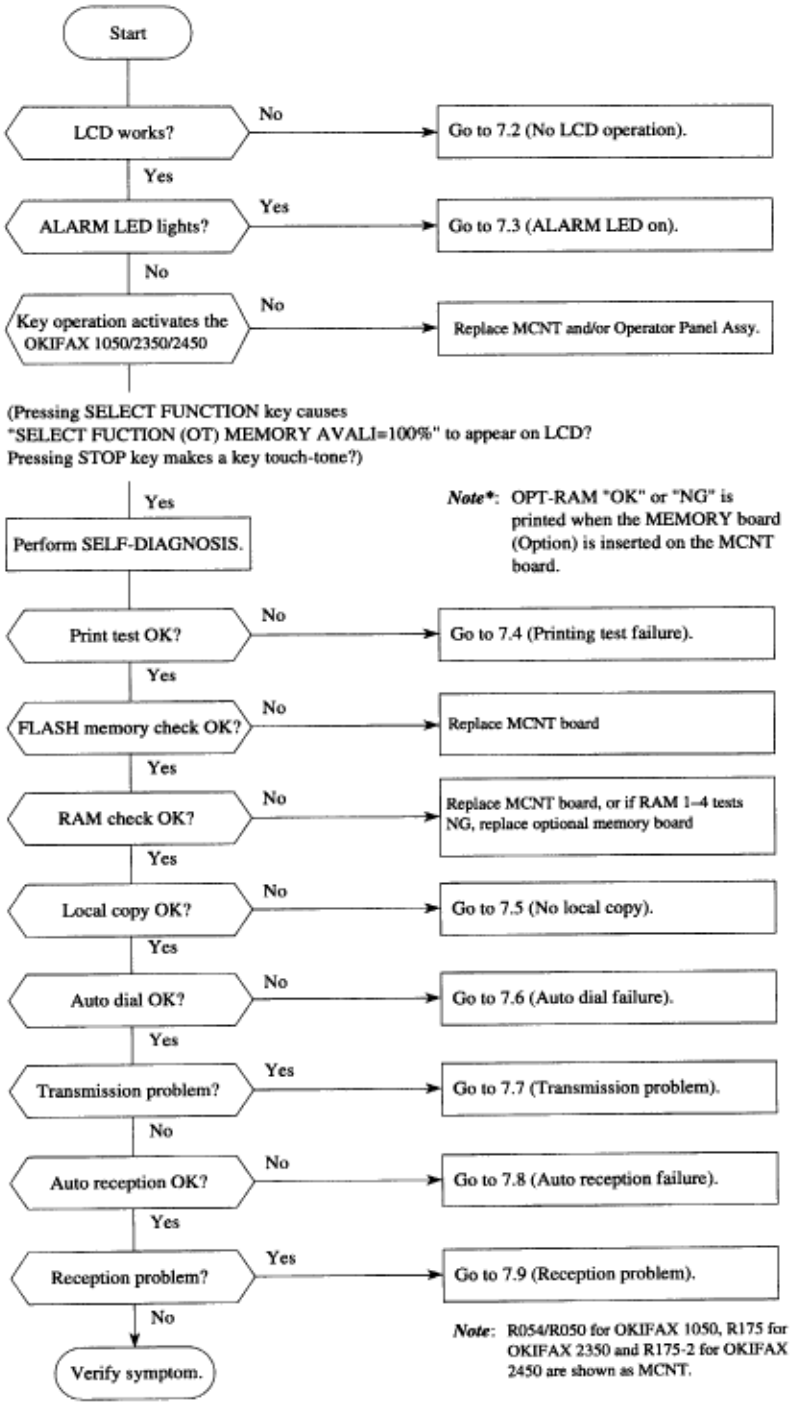

Copyright 1997, Okidata, Division of OKI America, Inc. All rights reserved. See the OKIDATA Business Partner Exchange (BPX) for any updates to this material. (http://bpx.okidata.com)

7.2 No LCD Operation

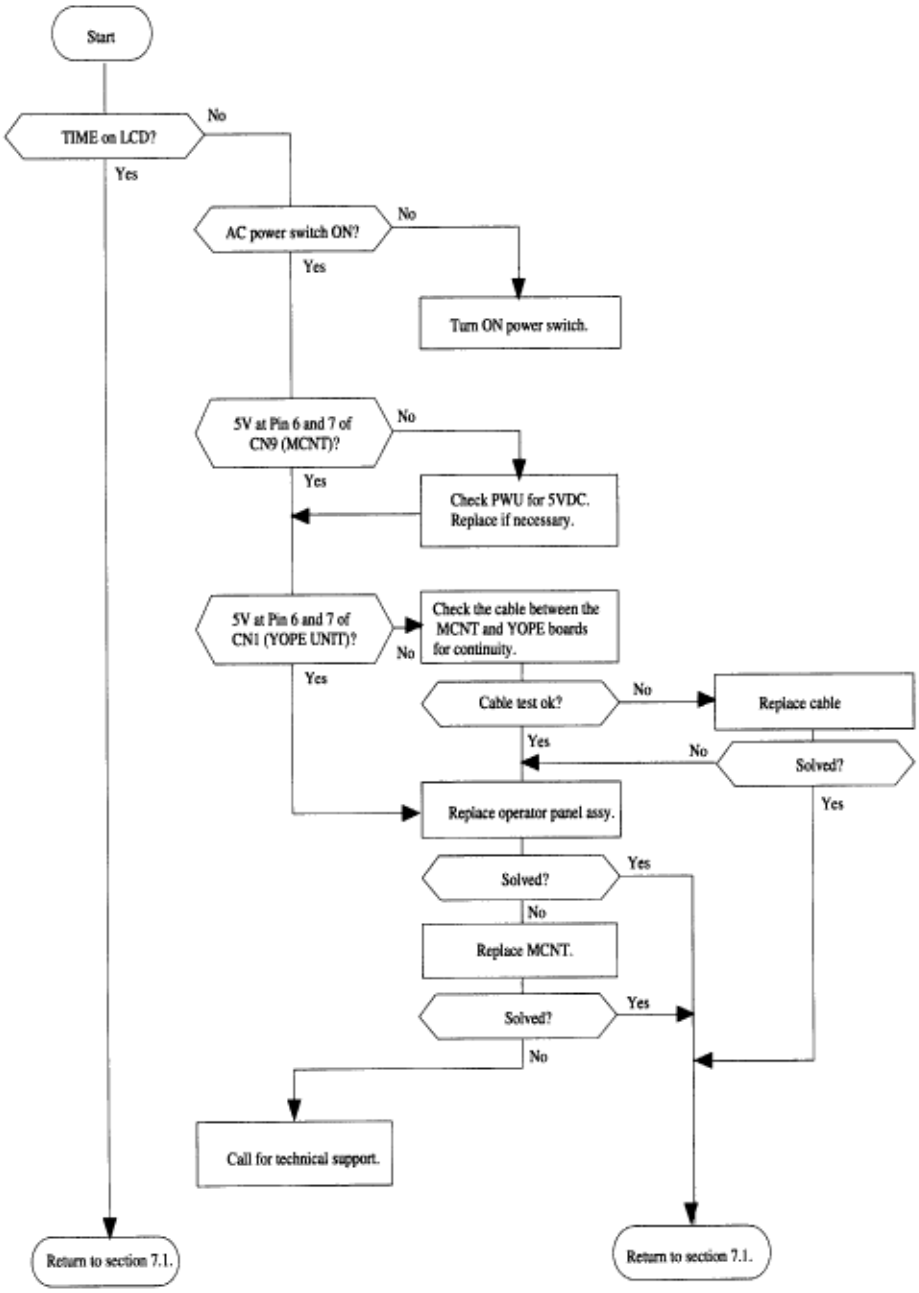

Copyright 1997, Okidata, Division of OKI America, Inc. All rights reserved. See the OKIDATA Business Partner Exchange (BPX) for any updates to this material. (http://bpx.okidata.com)

7.3 ALARM LED ON

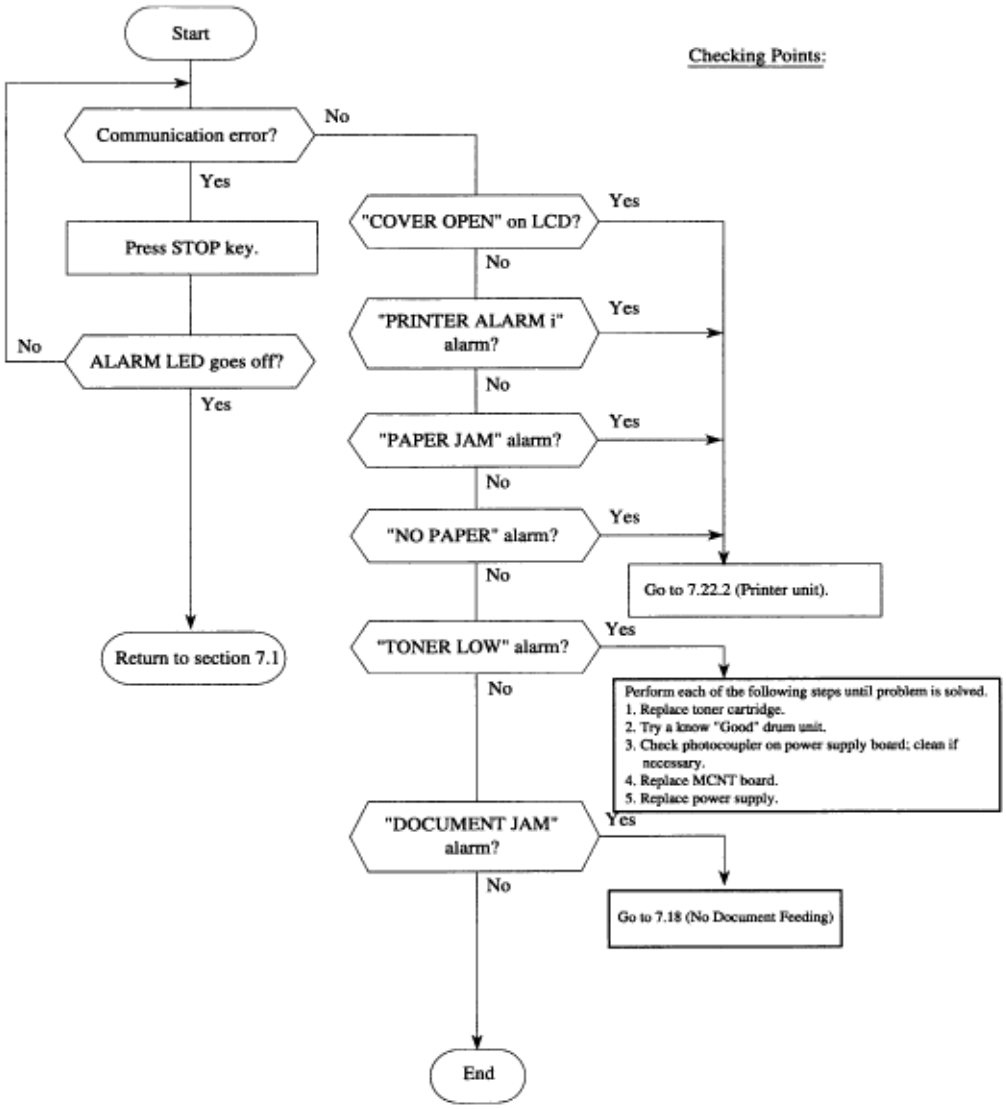

*Note** : "PRINTER ALARM i" will be shown as follows:
PRINTER ALARM 1 to PRINTER ALARM 4.

Copyright 1997, Okidata, Division of OKI America, Inc. All rights reserved. See the OKIDATA Business Partner Exchange (BPX) for any updates to this material. (http://bpx.okidata.com)

7.4 Printing Test Failure

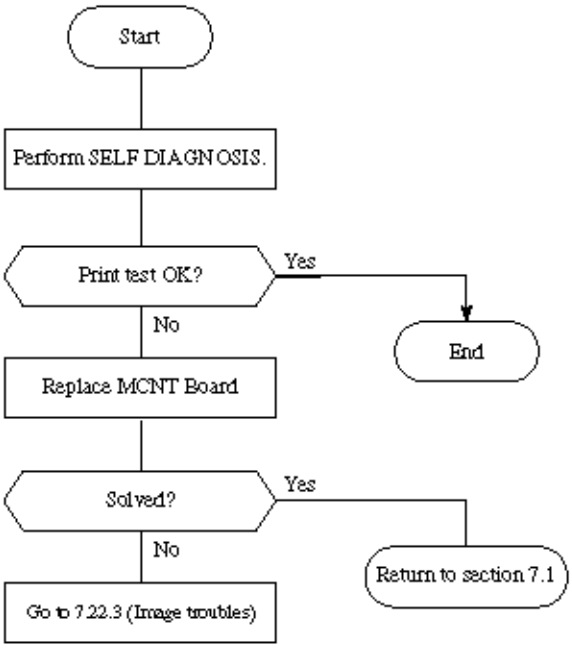

Copyright 1997, Okidata, Division of OKI America, Inc. All rights reserved. See the OKIDATA Business Partner Exchange (BPX) for any updates to this material. (http://bpx.okidata.com)

7.5 No Local Copy

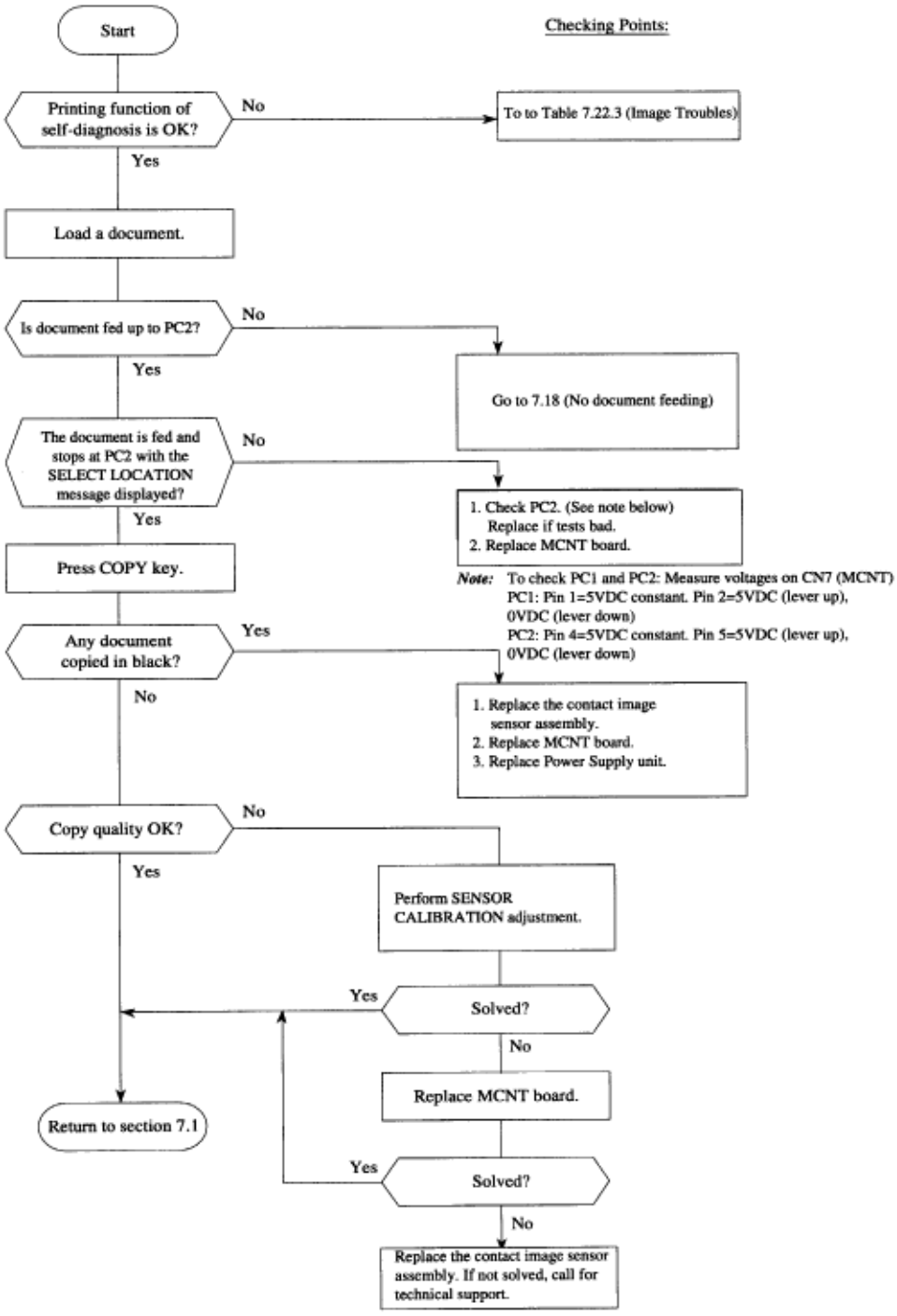

Copyright 1997, Okidata, Division of OKI America, Inc. All rights reserved. See the OKIDATA Business Partner Exchange (BPX) for any updates to this material. (http://bpx.okidata.com)

7.6 Auto Dial Failure

Note: Make sure that your selected dialing method (tone/pulse) is appropriate for your Telco / PBX needs. Refer to the Dialing Parameters in the Users Documentation.

START

Will the unit perform a manual dial?

NO Can a dial tone be heard when the handset is picked up?

NO Make sure the RJ-11C is connected to the LINE Jack on the OKIFAX.

Can a dial tone be heard?

YES End of procedure.

NO Unplug the Okifax 1000 from the RJ-11C and attach a standard single line telephone to the RJ-11C.

Can a dial tone be heard?

NO Contact your local TELCO.

YES Perform the following in the order listed:

(1) Replace the modular line cord.

(2) Replace the NCU-U board.

(3) Hook switch.

(4) MCNT board.

YES Replace the MCNT.

YES Replace the MCNT.

Is the problem resolved?

YES End of procedure.

NO Contact Technical Support.

Check the following items:
Off-hook bypass OFF (TF no. 05)

- MF/DP (Dial parameter)
- DP rate (Dial parameter)
- DP make ratio (Dial parameter)
  Dial type (Dial parameter)
- The other dial parameters

Note: TF=Technical function

Copyright 1997, Okidata, Division of OKI America, Inc. All rights reserved. See the OKIDATA Business Partner Exchange (BPX) for any updates to this material. (http://bpx.okidata.com)

7.7 Transmission Problem

This section explains how to localize the cause of problems occurred after completion of connection with a remote station.

Before beginning: Printout the Activity Report.

- Look for common failure items. For instance, is one particular country, area code or phone number always causing the problem?
- If possible, substitute the "defective" OKIFAX unit with a known good facsimile unit. If the trouble persists, there may be a problem with the line or at the receiving end.
- Check the OKIFAX User Functions, Dialing Parameters and Technical Functions.

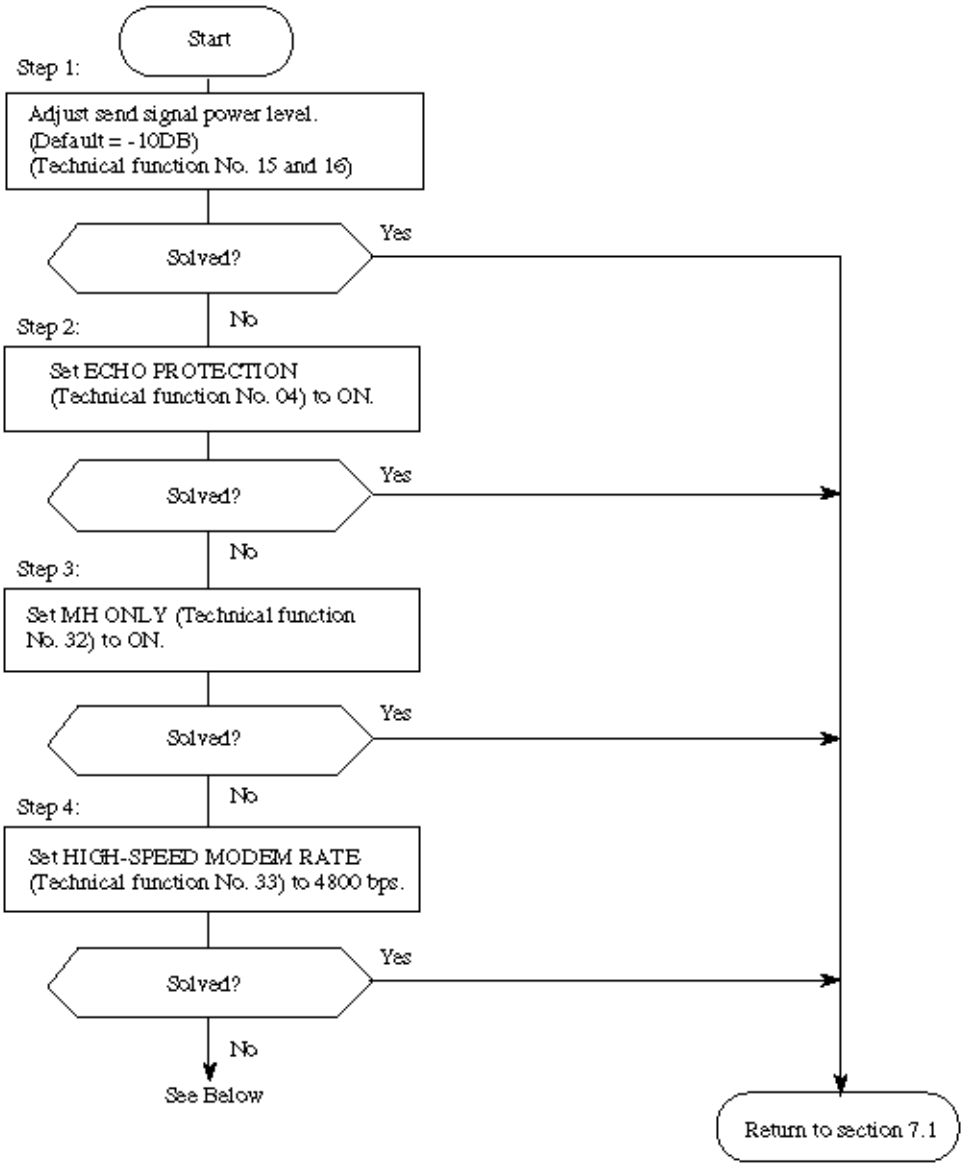

Perform the High-Speed Modem Transmit Test (refer to section 7.13). If this test fails, perform replacements listed below until problem is corrected.

Data communication problems could have many different causes. It would be almost impossible to design a RAP to cover all possible situations. Therefore, once you have performed the above listed steps, replace the following assemblies in the order listed:

1) Modem board (OKIFAX 2350/2450 only)
2) MCNT board
3) NCU-U board.

Note: This procedure determines the cause of a problem which occurs after the OKIFAX unit connects with a remote station. Before troubleshooting any communication problems, run Self-Diagnosis, then verify that the Flash ROM version is the most current version (in accordance with the Product Bulletins (formerly known as Technical Service Bulletins TSBs If the Flash ROM version is not the most current, replace the MCNT board before proceeding!

Copyright 1997, Okidata, Division of OKI America, Inc. All rights reserved. See the OKIDATA Business Partner Exchange (BPX) for any updates to this material. (http://bpx.okidata.com)

7.8 Auto Reception Failure

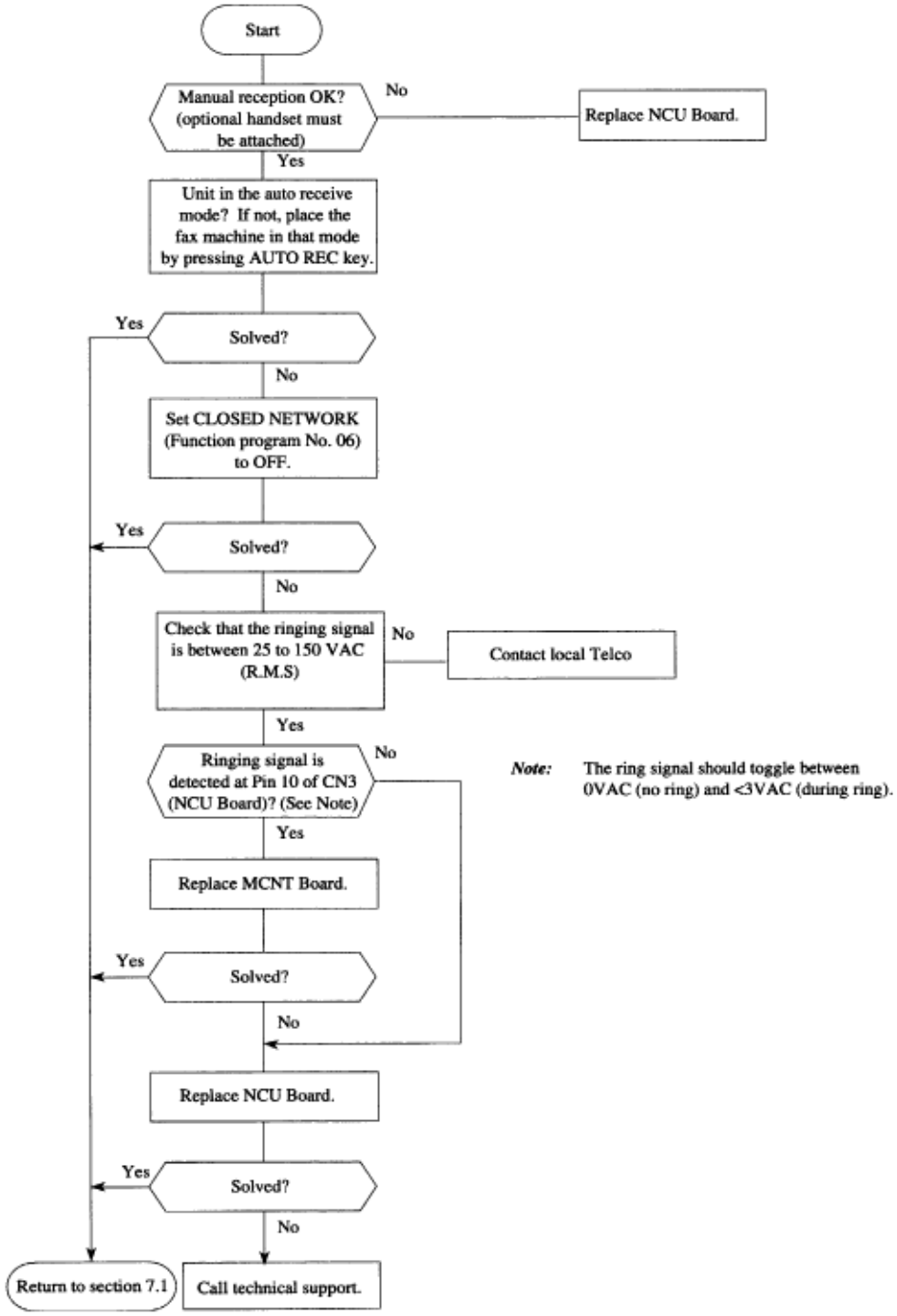

Copyright 1997, Okidata, Division of OKI America, Inc. All rights reserved. See the OKIDATA Business Partner Exchange (BPX) for any updates to this material. (http://bpx.okidata.com)

7.9 Reception Problem

This section explains how to localize the cause of problems occurred after completion of connection with a remote station.

Before beginning: Printout the Activity Report.

- Look for common failure items. For instance, is one particular country, area code or phone number always causing the problem?
- If possible, substitute the "defective" OKIFAX unit with a known good facsimile unit. If the trouble persists, there may be a problem with the line or at the receiving end.
- Check the OKIFAX User Functions, Dialing Parameters and Technical Functions.

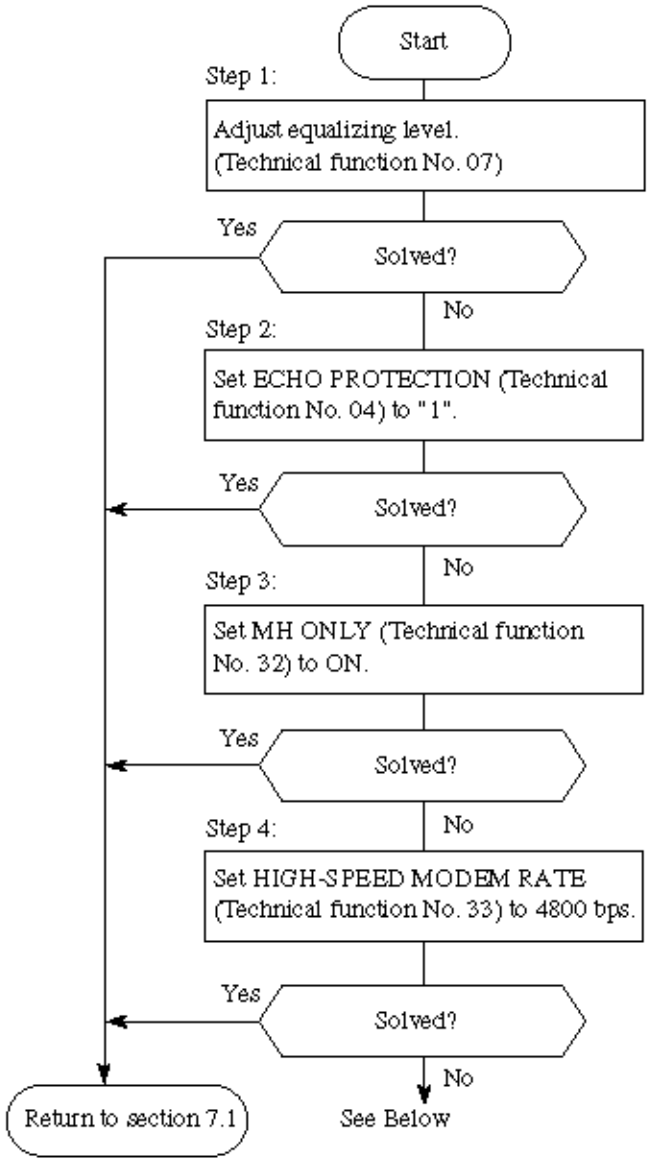

Perform the High-Speed Modem Transmit Test (refer to section 7.13). If this test fails, perform replacements listed below until problem is corrected.

Data communication problems could have many different causes. It would be almost impossible to design a RAP to cover all possible situations. Therefore, once you have performed the above listed steps, replace the following assemblies in the order listed:

1) Modem board. (OKIFAX 2350/2450 only)
2) MCNT board.
3) NCU-U board.

Note: This procedure determines the cause of a problem which occurs after the OKIFAX unit connects with a remote station. Before troubleshooting any communication problems, run Self-Diagnosis, then verify that the Flash ROM version is the most current version (in accordance with the Product Bulletins (formerly known as Technical Service Bulletins [TSBs). If the Flash ROM version is not the most current, replace the MCNT board before proceeding!

Copyright 1997, Okidata, Division of OKI America, Inc. All rights reserved. See the OKIDATA Business Partner Exchange (BPX) for any updates to this material. (http://bpx.okidata.com)

7.10 Scan Calibration Test Failure

START

Does the message SCANNING ERROR appear on the LCD when calibrating the CIS?

YES Be sure that plain white bond (A4 size) is loaded on the automatic document feeder.

Is - 12 vdc present at CN10, pin 4 of the MCNT board?

NO Replace the MCNT board

YES Replace the Contact Image Sensor

Is the problem resolved?

NO Check the "Scan-Control Cable" for continuity

YES End of procedure.

NO Is abnormal feeding observed during the SCANNING CHECK?

NO End of procedure.

YES Is the document not feeding at all?

YES **Refer to section 7.18.**

NO Is more than one document feeding?

YES **Refer to section 7.19.**

NO Does the document skew?

YES **Refer to section 7.20.**

NO Does the document jam?

YES **Refer to section 7.21.**

NO Is the problem resolved?

YES End of procedure.

NO Contact Technical Support.

Copyright 1997, Okidata, Division of OKI America, Inc. All rights reserved. See the OKIDATA Business

Partner Exchange (BPX) for any updates to this material. (http://bpx.okidata.com)

7.11 LED Test

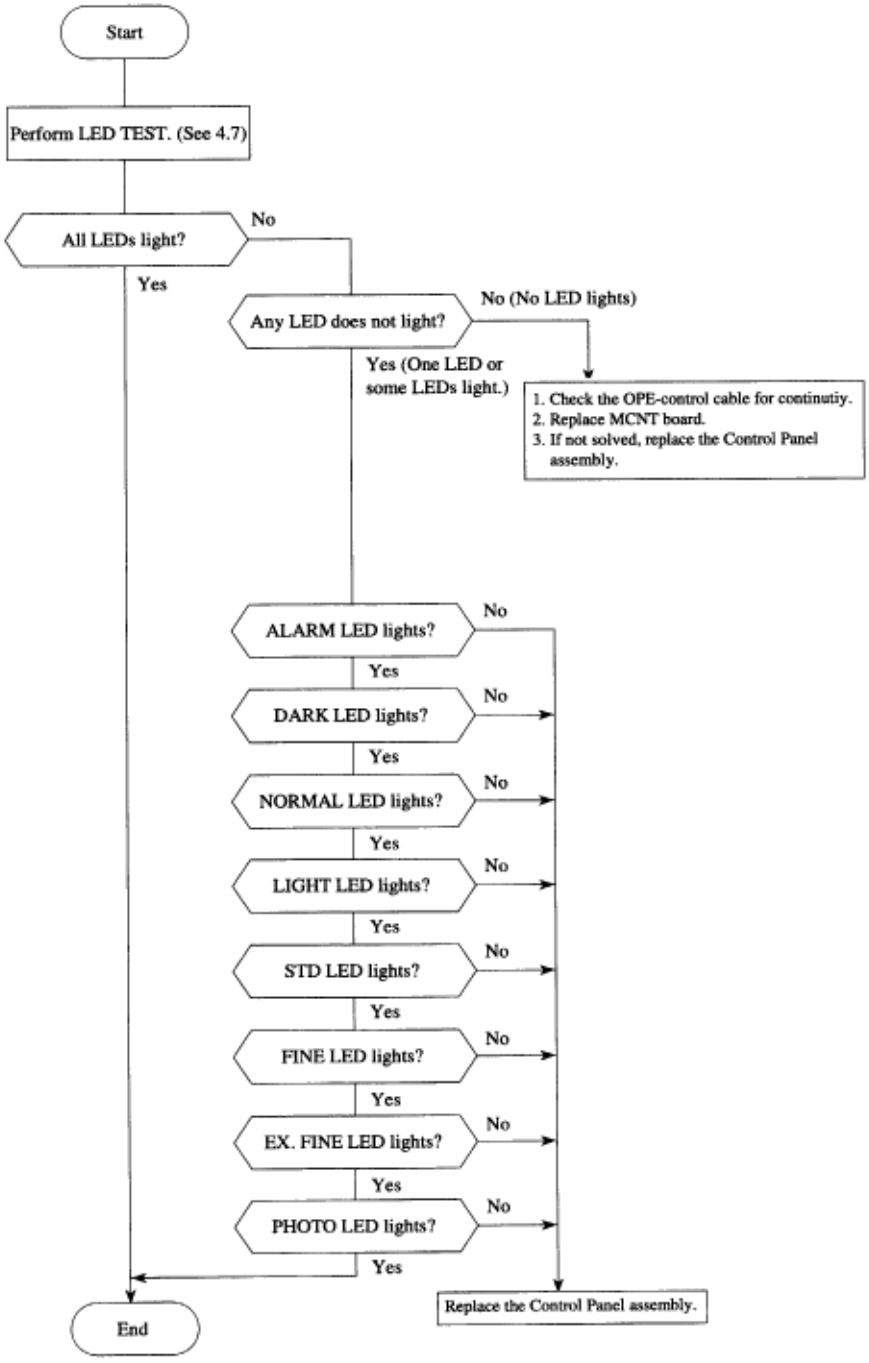
Start
Perform LED TEST. (See 4.7)
All LEDs light?
No
Yes
Any LED does not light?
No (No LED lights)
Yes (One LED or some LEDs light.)
1. Check the OPE-control cable for continutiy.
2. Replace MCNT board.
3. If not solved, replace the Control Panel assembly.
ALARM LED lights?
DARK LED lights?
NORMAL LED lights?
LIGHT LED lights?
STD LED lights?
FINE LED lights?
EX. FINE LED lights?
PHOTO LED lights?
Replace the Control Panel assembly.
End

Copyright 1997, Okidata, Division of OKI America, Inc. All rights reserved. See the OKIDATA Business Partner Exchange (BPX) for any updates to this material. (http://bpx.okidata.com)

7.12 Tone Send Test

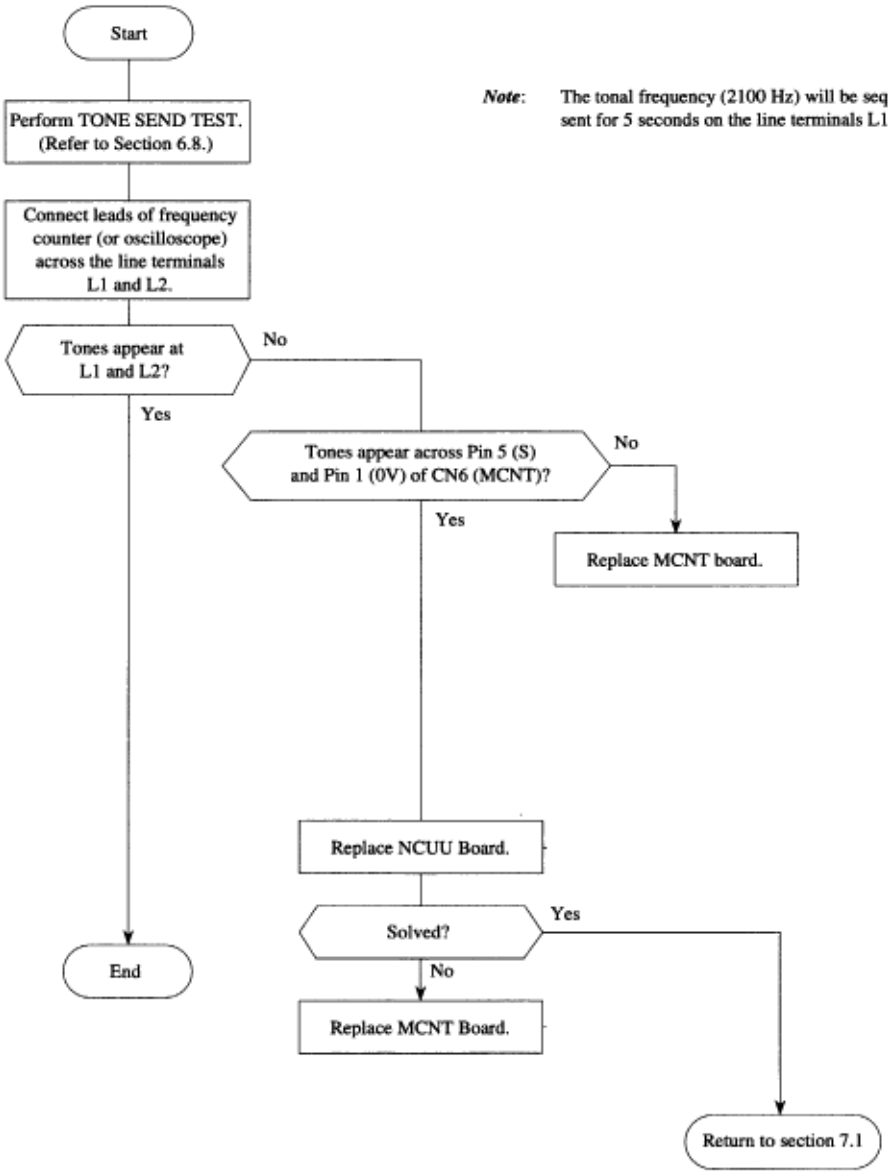

Note: The tonal frequency (2100 Hz) will be sequentially sent for 5 seconds on the line terminals L1 and L2.

Copyright 1997, Okidata, Division of OKI America, Inc. All rights reserved. See the OKIDATA Business Partner Exchange (BPX) for any updates to this material. (http://bpx.okidata.com)

7.13 High-speed Modem Test

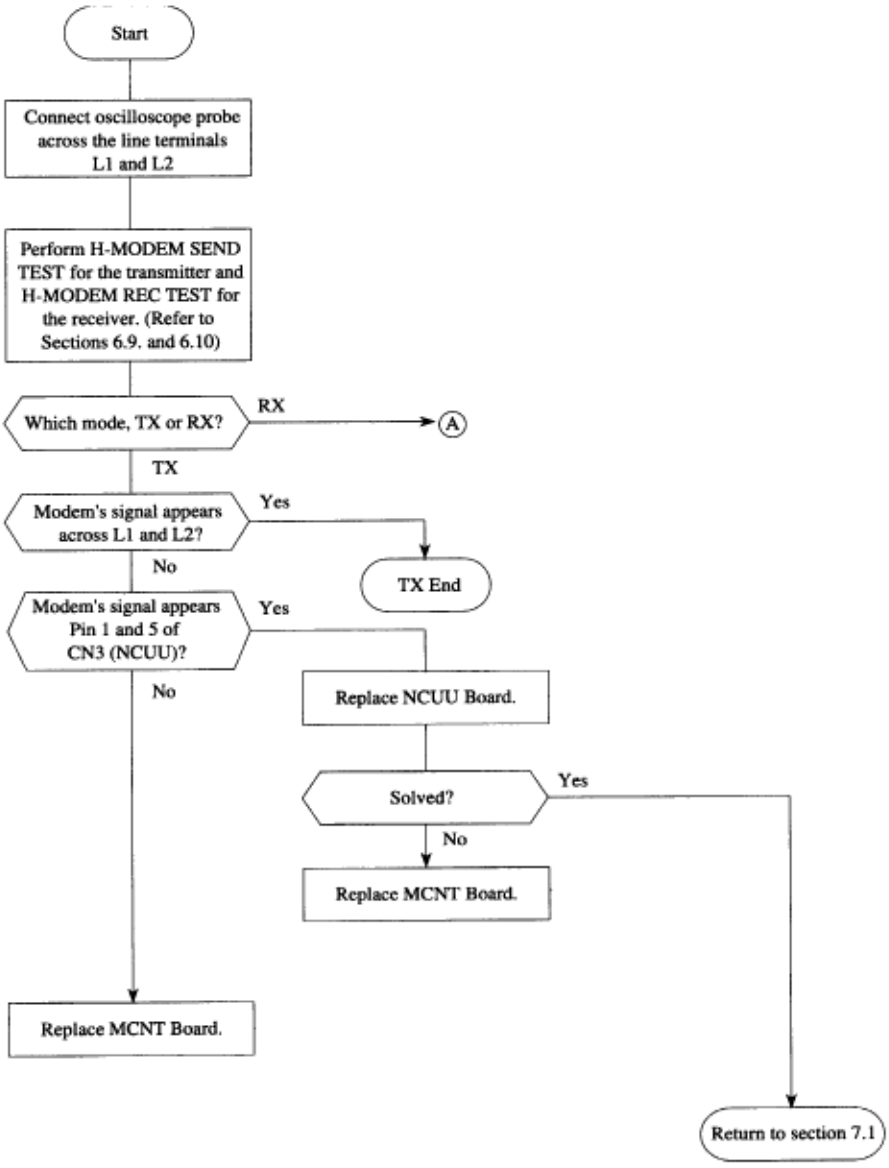

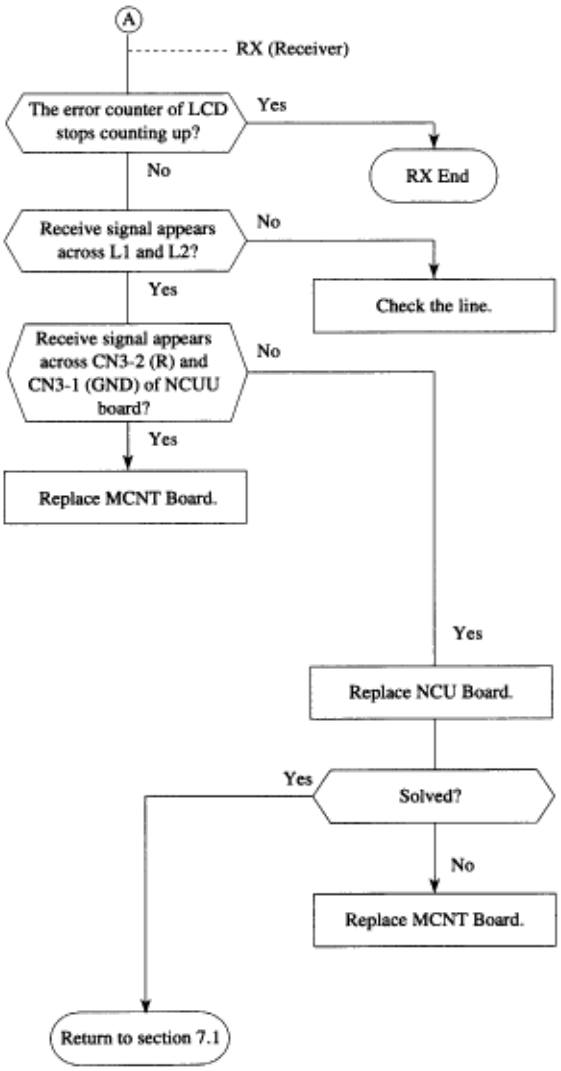

Copyright 1997, Okidata, Division of OKI America, Inc. All rights reserved. See the OKIDATA Business Partner Exchange (BPX) for any updates to this material. (http://bpx.okidata.com)

7.14 MF Send Test

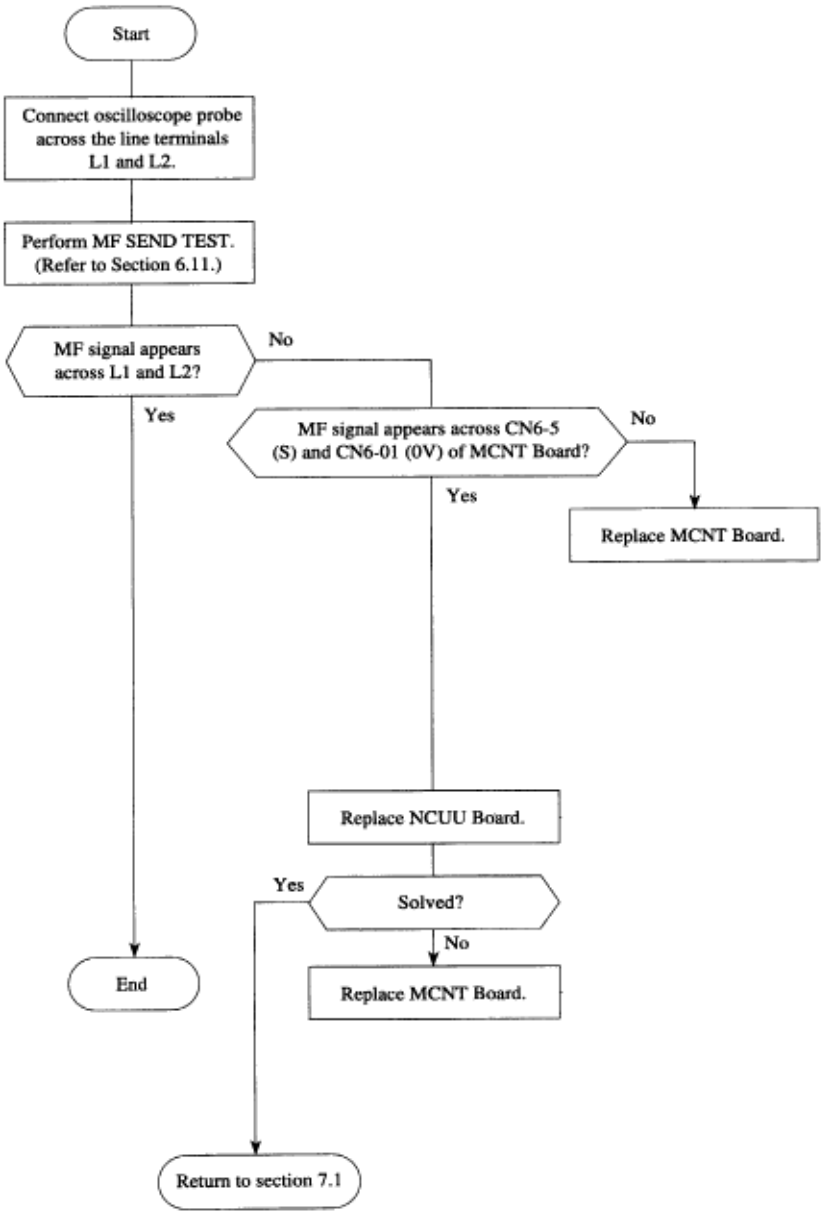

Copyright 1997, Okidata, Division of OKI America, Inc. All rights reserved. See the OKIDATA Business Partner Exchange (BPX) for any updates to this material. (http://bpx.okidata.com)

7.15 Tone (TEL/FAX) Send Test

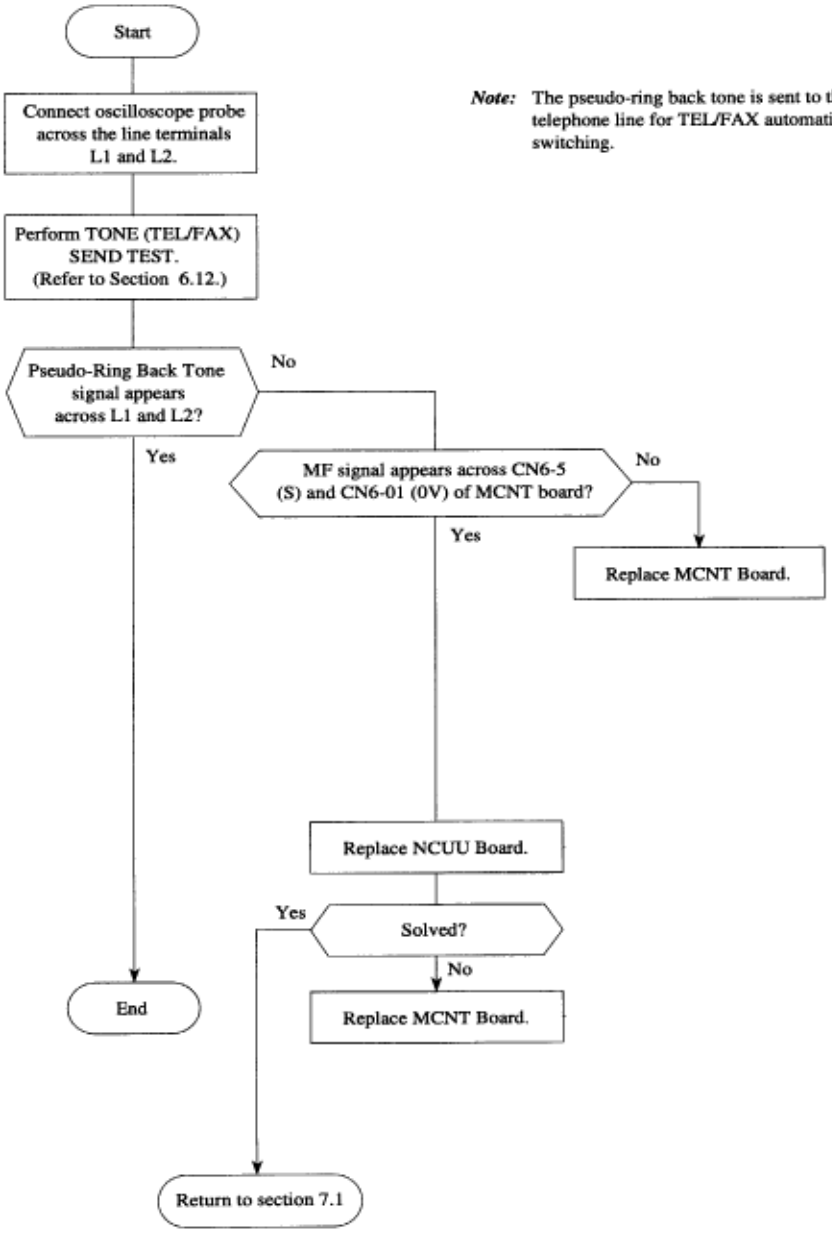

Note: The pseudo-ring back tone is sent to the telephone line for TEL/FAX automatic switching.

Copyright 1997, Okidata, Division of OKI America, Inc. All rights reserved. See the OKIDATA Business Partner Exchange (BPX) for any updates to this material. (http://bpx.okidata.com)

7.16 No Acoustic Line Monitor

There are two source routes of acoustic line monitor:

(a) General communication signal

(b) DP pulse signal

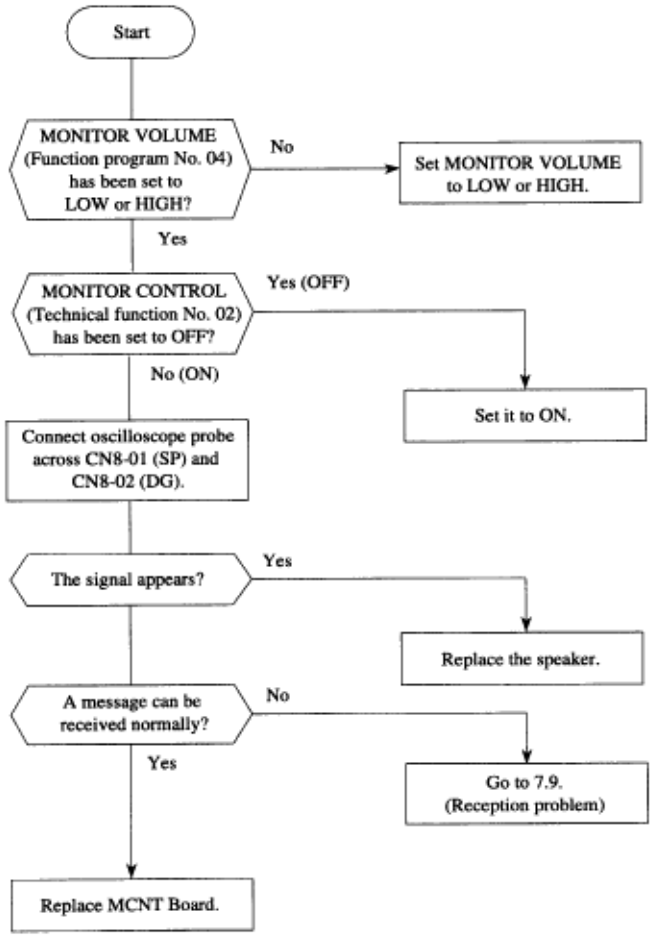

Copyright 1997, Okidata, Division of OKI America, Inc. All rights reserved. See the OKIDATA Business Partner Exchange (BPX) for any updates to this material. (http://bpx.okidata.com)

7.17 Power Supply Unit

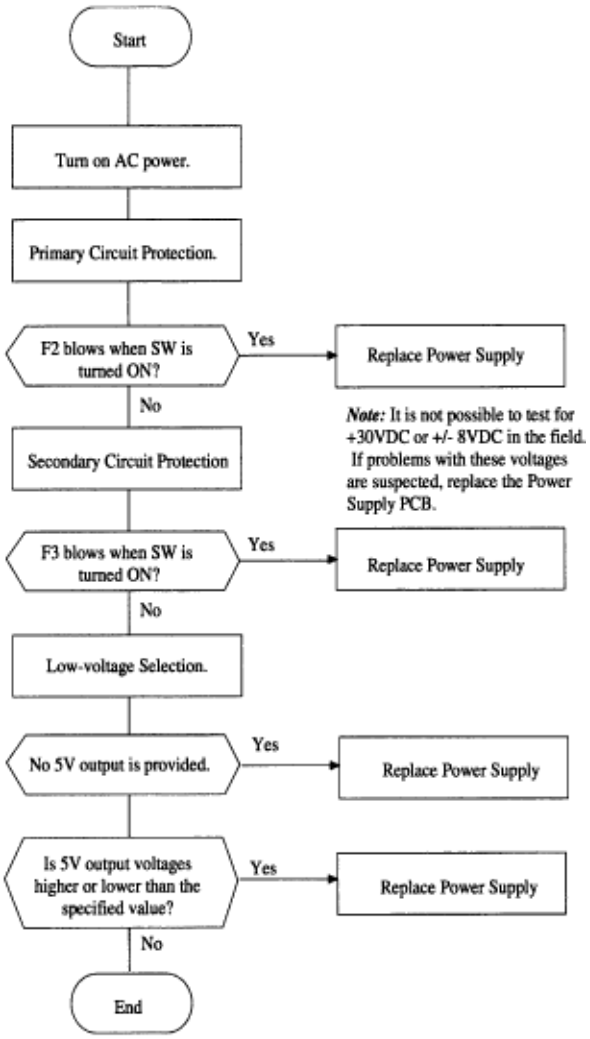

Copyright 1997, Okidata, Division of OKI America, Inc. All rights reserved. See the OKIDATA Business Partner Exchange (BPX) for any updates to this material. (http://bpx.okidata.com)

7.18 No Document Feeding

Note: This section places an emphasis on troubleshooting of mechanical portions. Therefore, it is recommended to replace the MCNT Board if the following procedures do not solve the problem.

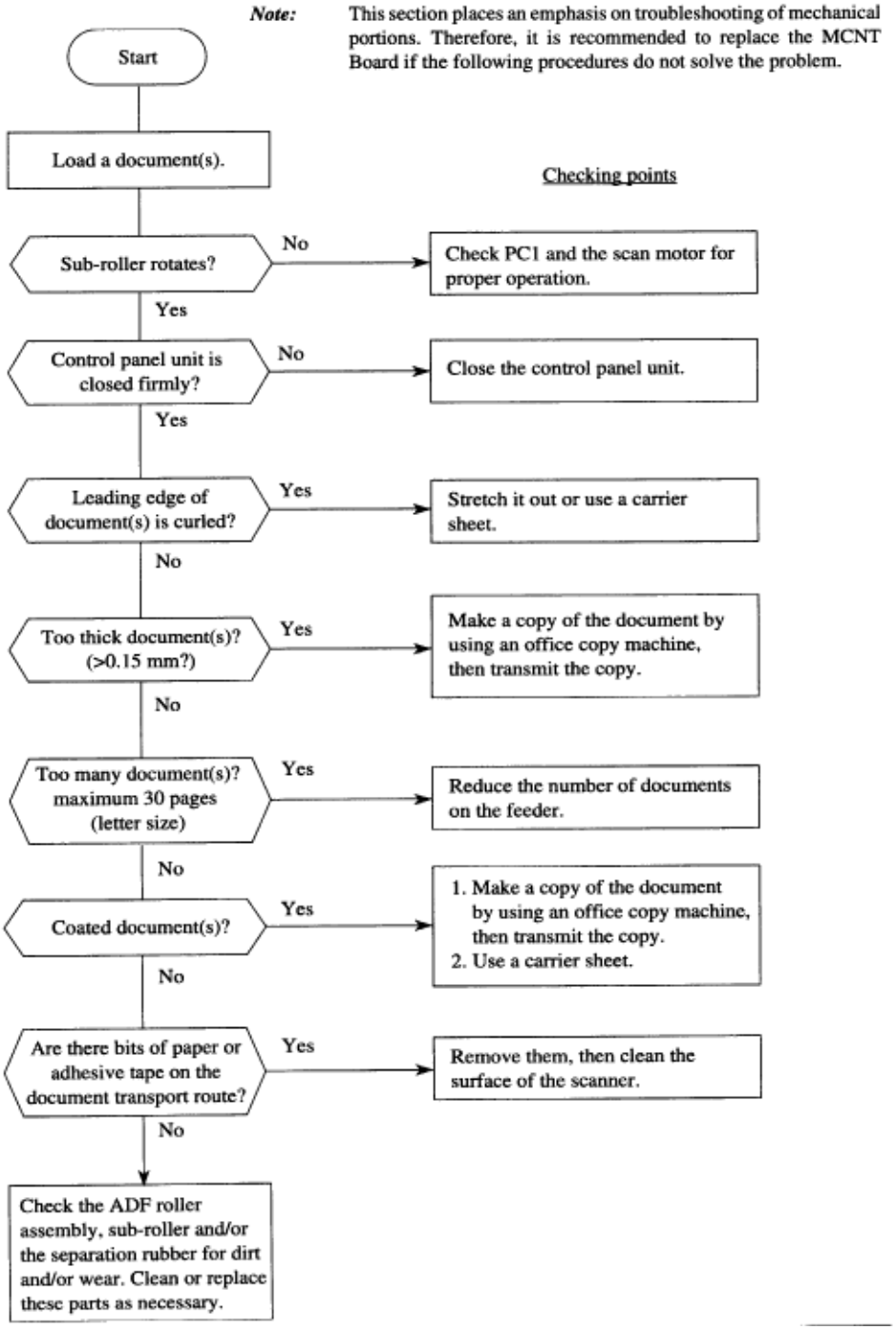

Copyright 1997, Okidata, Division of OKI America, Inc. All rights reserved. See the OKIDATA Business Partner Exchange (BPX) for any updates to this material. (http://bpx.okidata.com)

7.19 Multiple Document Feeding

Definition: Multiple document feeding. Multiple documents are not separated and they are fed in the same one feeding operation.

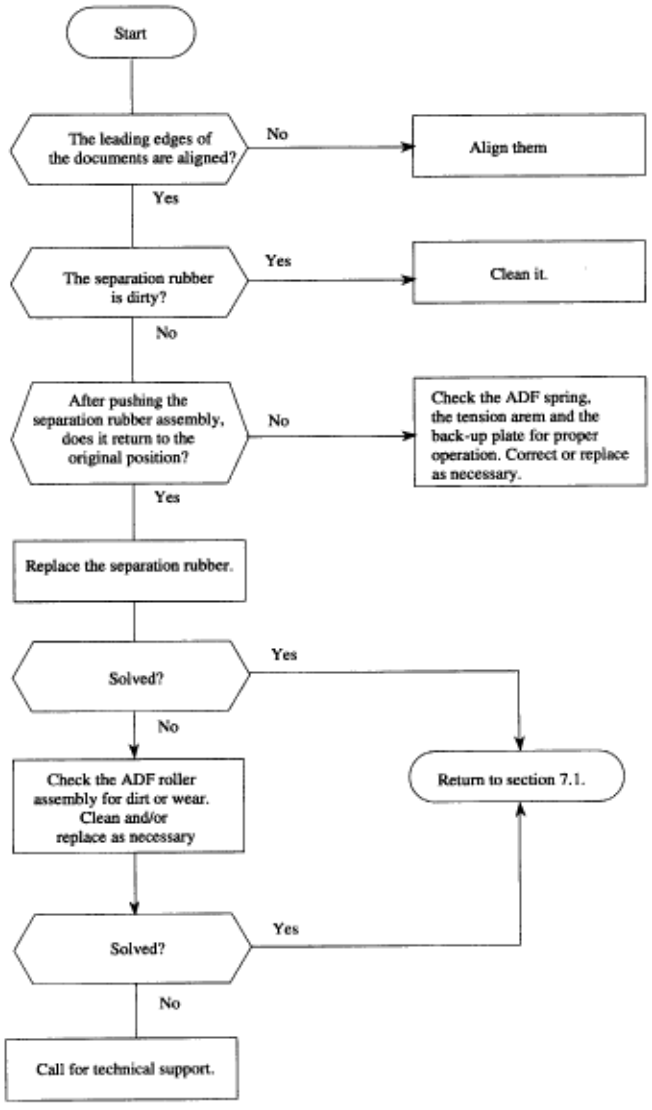

Copyright 1997, Okidata, Division of OKI America, Inc. All rights reserved. See the OKIDATA Business Partner Exchange (BPX) for any updates to this material. (http://bpx.okidata.com)

7.20 Document Skew

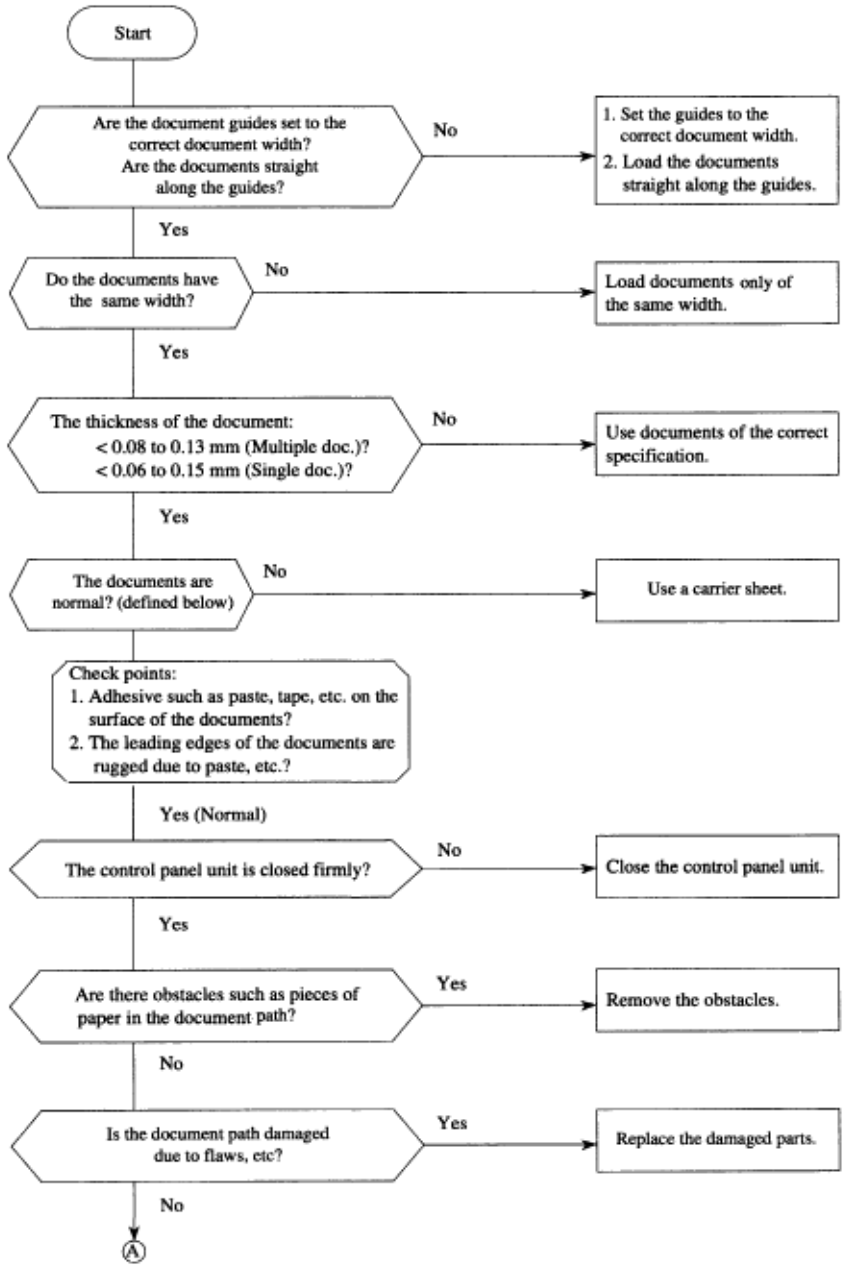

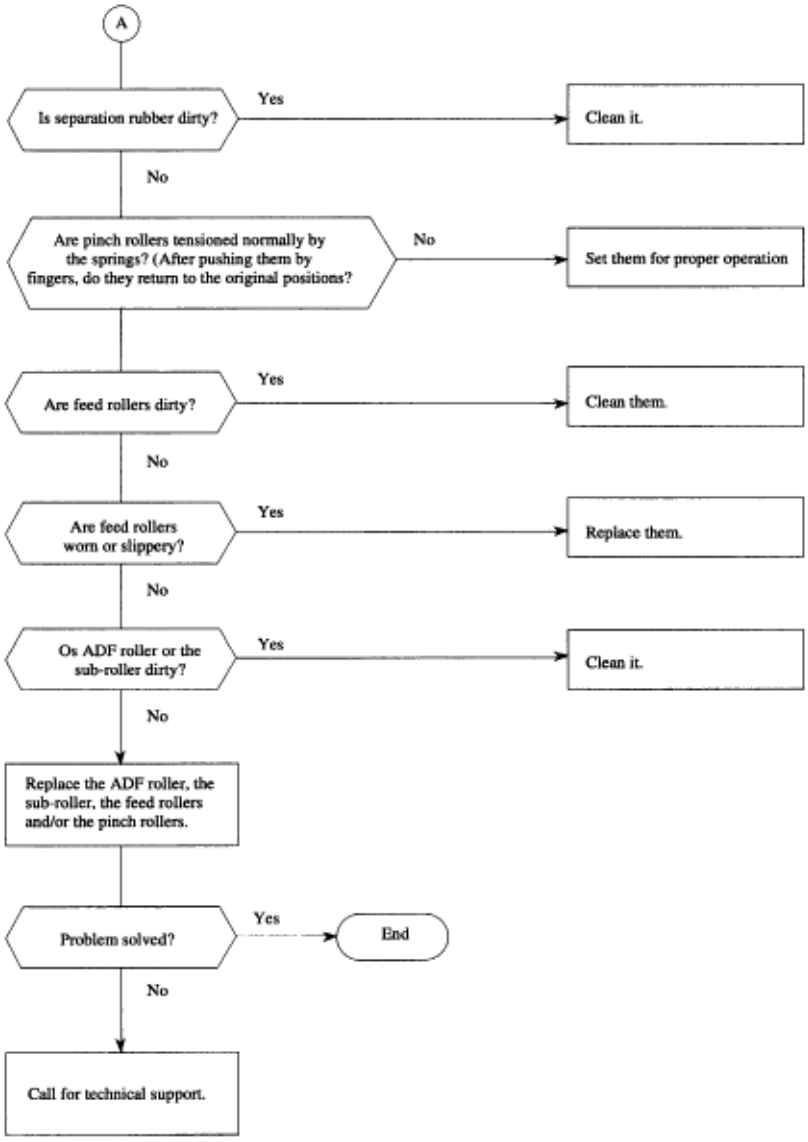

Copyright 1997, Okidata, Division of OKI America, Inc. All rights reserved. See the OKIDATA Business Partner Exchange (BPX) for any updates to this material. (http://bpx.okidata.com)

7.21 Document Jam

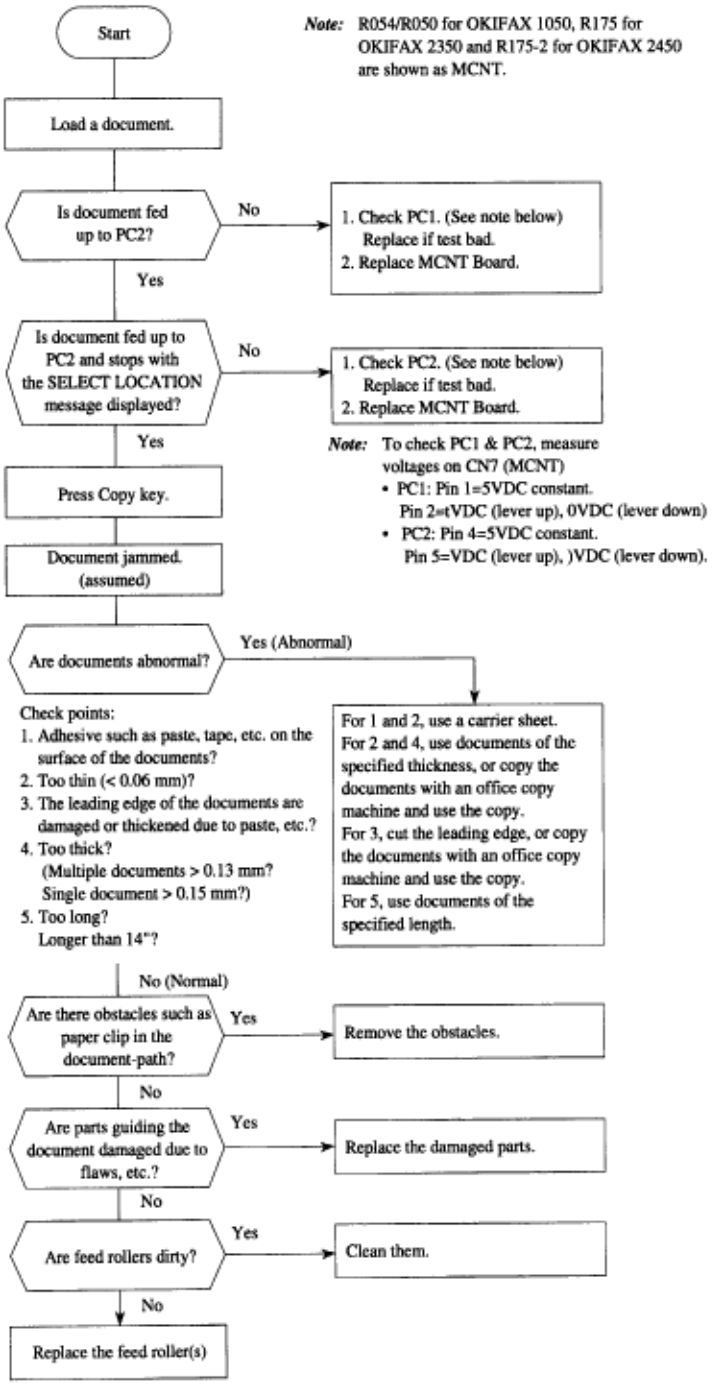

Copyright 1997, Okidata, Division of OKI America, Inc. All rights reserved. See the OKIDATA Business Partner Exchange (BPX) for any updates to this material. (http://bpx.okidata.com)

7.22 Printer Unit

7.22.01 Precautions

1. Points to check before correcting image troubles

(1) Is the printer being run in proper ambient conditions? (See specifications in section 1) (2) Have the supplies (toner and Image Drum) been replaced properly?
(3) Are the supplies recommended Okidata Consumables?
(4) Is the recording paper normal?
(5) Has the Image Drum been loaded properly?

2. Tips for correcting image troubles

(1) Do not touch, or bring foreign matter into contact with the surface of the drum.
(2) Do not expose the drum to direct sunlight.
(3) **Components in the fuser area (fuser, backup roller, etc.) are very hot. Do not touch them until they cool!**
(4) Do not expose the drum to light for longer than 5 minutes at room temperature.

Copyright 1997, Okidata, Division of OKI America, Inc. All rights reserved. See the OKIDATA Business Partner Exchange (BPX) for any updates to this material. (http://bpx.okidata.com)

7.22.2 Troubleshooting Flow Chart of Printer Unit

Overall troubleshooting flow chart:

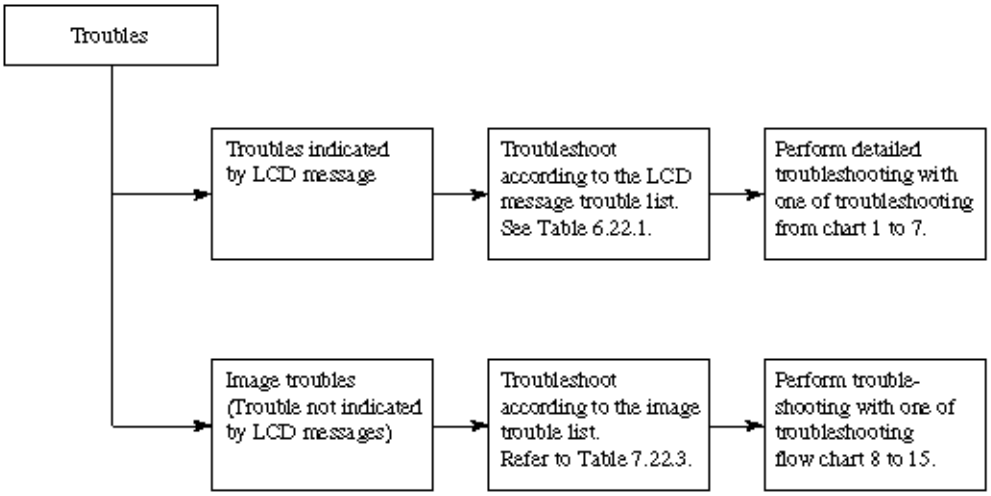

Category	LCD message display	Trouble	Troubleshooting flow chart number
Cover open	14:14 [FAX] COVER OPEN	The cover (copy stacker) is open.	1
Image drum alarm	14:14 [FAX] CHANGE DRUM	Warning message to replace ID unit because of its life.	2
Engine errors	PRINTER ALARM 2[TEL] PLEASE CONFIRM	Engine controller error (Option: 2nd tray)	3
	PRINTER ALARM 3[TEL] PLEASE CONFIRM	Fan motor rotation error	4
	PRINTER ALARM 4[TEL] PLEASE CONFIRM	Fuser unit thermal error	5
Recording paper/ jam error	PAPER JAM [FAX] CONFIRM AND "STOP"	Recording paper feed jam, transport jam, ejection jam, recording size error	6

Paper cassette request	NO PAPER [FAX] REPLACE PAPER	No recording paper cassette or no recording paper	7
Daily status	TONER LOW [FAX] REPLACE TONER CART.	Toner is running short. Note: No toner memory RX is ON.	
	14:14 [FAX] REPLACE TONER CART.	Toner is running empty. Note: No toner memory RX is OFF.	

Copyright 1997, Okidata, Division of OKI America, Inc. All rights reserved. See the OKIDATA Business Partner Exchange (BPX) for any updates to this material. (http://bpx.okidata.com)

Troubleshooting flow chart 1:

The cover (copy stacker) is open.

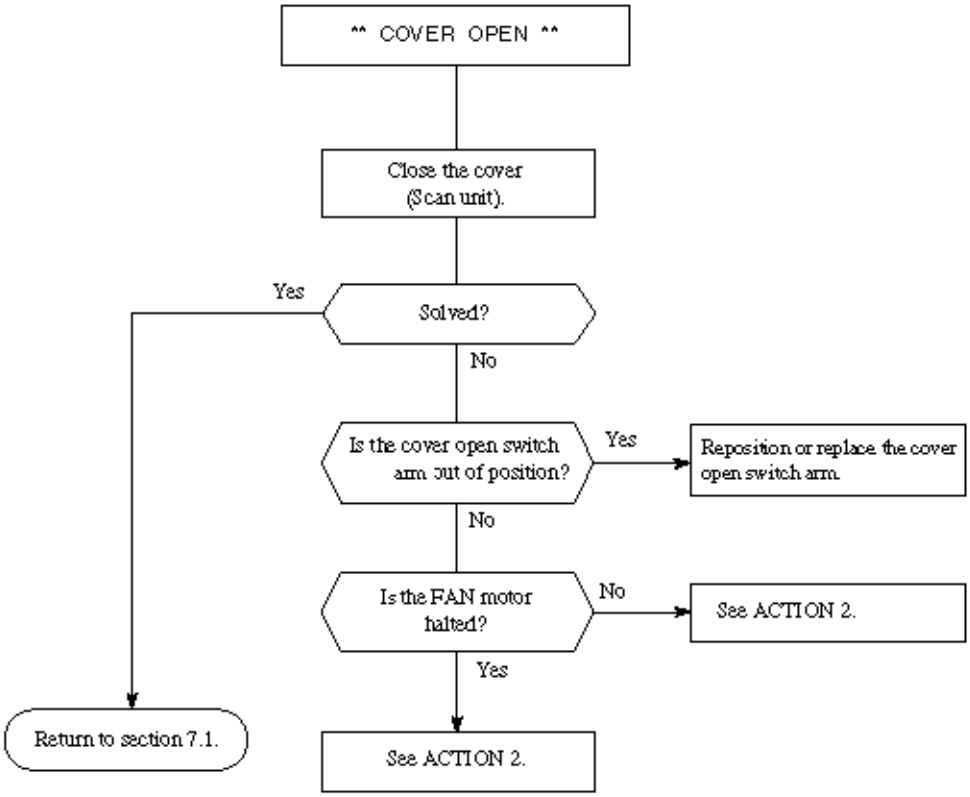

Copyright 1997, Okidata, Division of OKI America, Inc. All rights reserved. See the OKIDATA Business Partner Exchange (BPX) for any updates to this material. (http://bpx.okidata.com)

Troubleshooting flow chart 2:

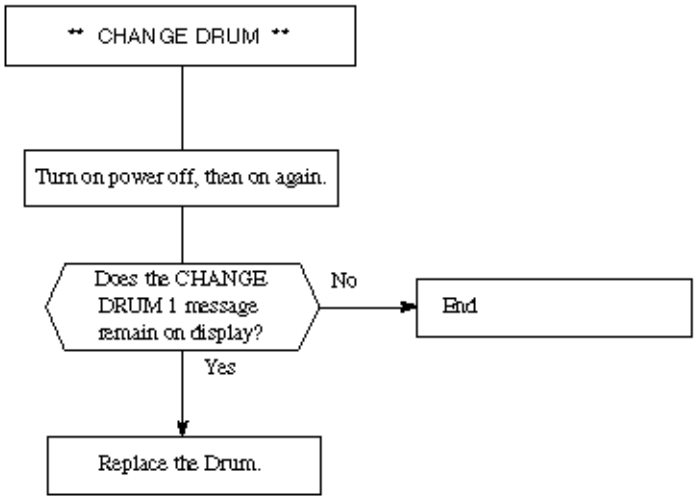

Warning message to replace ID unit because of its life.

Copyright 1997, Okidata, Division of OKI America, Inc. All rights reserved. See the OKIDATA Business Partner Exchange (BPX) for any updates to this material. (http://bpx.okidata.com)

Troubleshooting flow chart 3:

Engine controller error (ROM/RAM error)

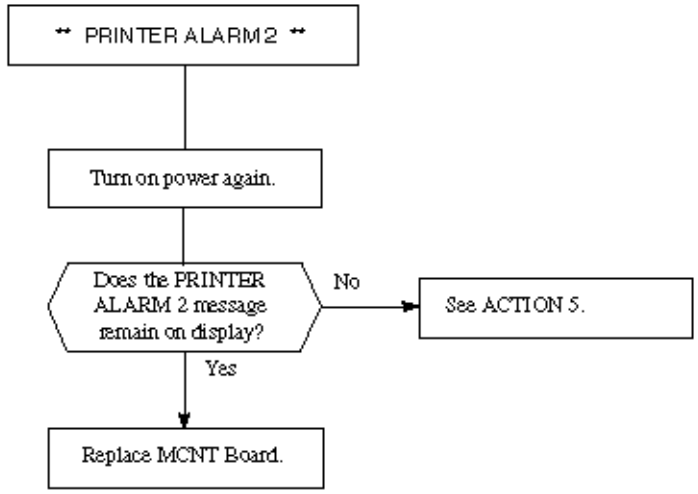

Copyright 1997, Okidata, Division of OKI America, Inc. All rights reserved. See the OKIDATA Business Partner Exchange (BPX) for any updates to this material. (http://bpx.okidata.com)

Troubleshooting flow chart 4:

Fan motor rotation error

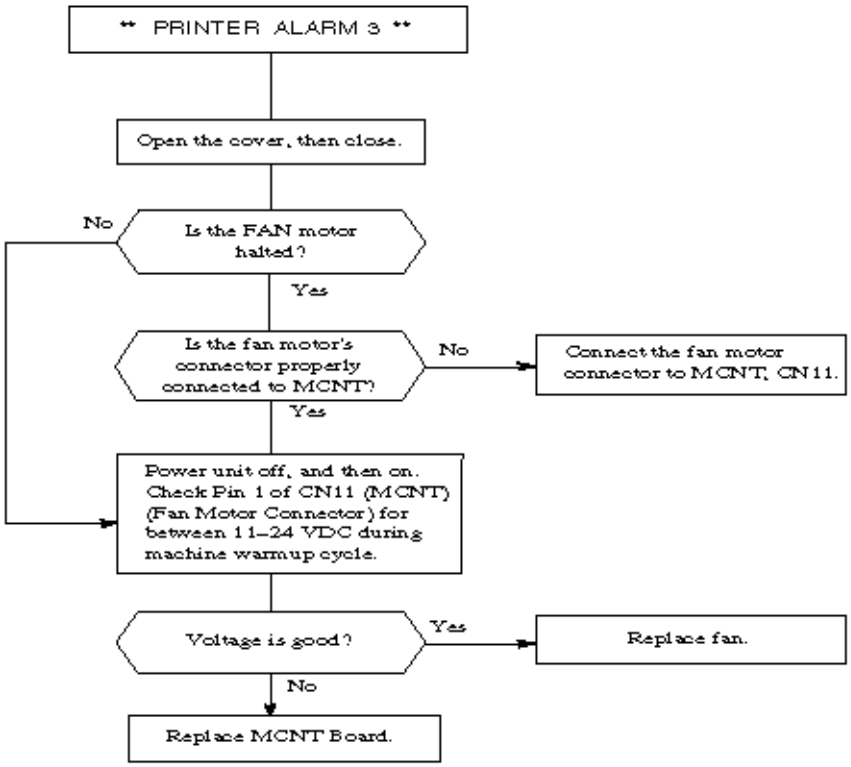

Copyright 1997, Okidata, Division of OKI America, Inc. All rights reserved. See the OKIDATA Business Partner Exchange (BPX) for any updates to this material. (http://bpx.okidata.com)

Troubleshooting flow chart 5:
Printer Alarm 4

START

PRINTER ALARM 4 appears on the LCD display.

Power OFF, then power ON.

After a short delay, does "PRINTER ALARM 4" appear on the LCD display?

YES Remove the fuser assembly for testing (Refer to the Action Items Diagram). Check the resistance between the thermistor contacts. At room temperature, it should read approximately 100 Kohms. (about 1.5 Kohms at high temperature).

Is the resistance correct?

NO Replace the fusing unit.

YES Does the thermistor contact correctly touch the contact assembly when the fusing unit is installed? (Refer to the Action Items Diagram)

NO Adjust the contacts as necessary.

YES Refer to Action Item 10. Power OFF, then Power ON.

Does PRINTER ALARM 4 occur approximately 60 seconds after powering ON the unit?

YES Is the heater lamp of the fusing unit ON? To check, remove the stacker cover. Overide the cover interlock. Light can be seen from the ends of the fuser when the heater lamp is ON.

NO Is the heater or thermistor open? Measure the resistance between the two heater contacts. Normal resistance is approximately 0 ohms.

YES Replace the fusing unit.

NO Is the AC voltage from the fuser present at the contact assembly?

NO Replace the MCNT board. If the problem persists, replace the power supply board.

YES Replace the fusing unit.

Copyright 1997, Okidata, Division of OKI America, Inc. All rights reserved. See the OKIDATA Business Partner Exchange (BPX) for any updates to this material. (http://bpx.okidata.com)

Troubleshooting flow chart 6:

Recording paper feed jam, transport jam, ejection jam, recording size error

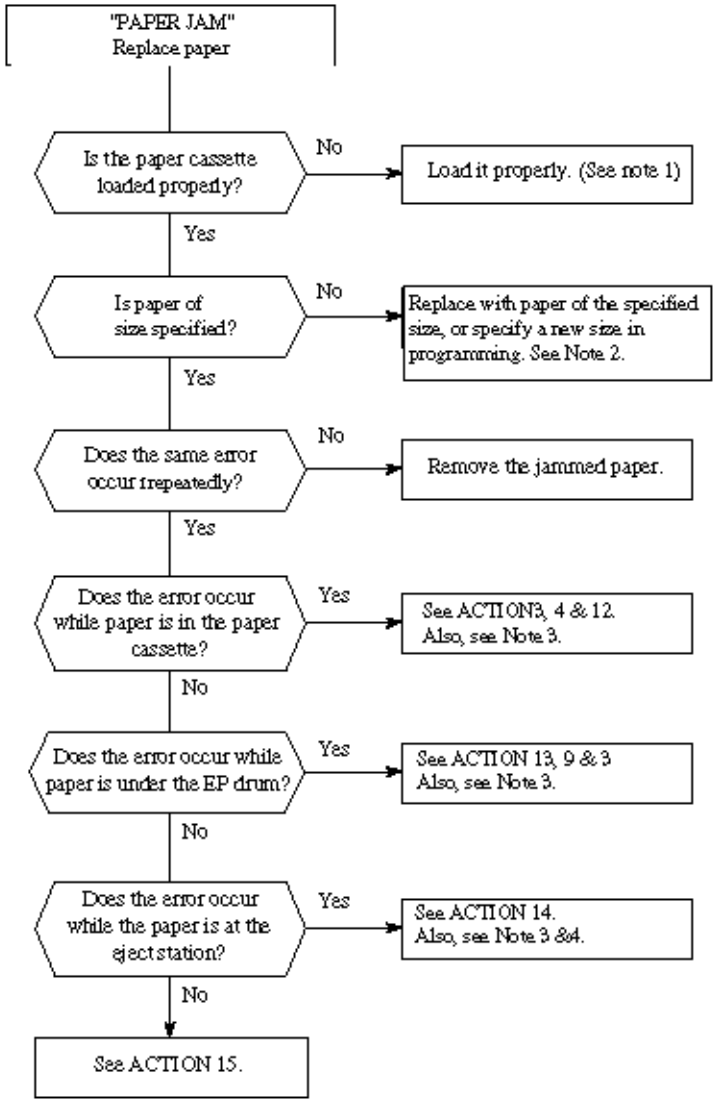

Note 1: The paper length stop must be set for the correct paper size, but should not be "pinching" the paper. Paper should not be loaded above the "paper fill" indicator.

Note 2: The programmed settings of user function number 10 (1st cassette size) and user function number 11 (2nd cassette size) (optional) should be set to match the paper size loaded in each paper cassette. If not, a "logical" jam will follow.

Note 3: Always vacuum loose toner from inside the printer. If toner has spilled, pay special attention to cleaning it from all drive gears. (Including the fuser roller gear and transfer (TR) Gear). Toner infused in the drive gear chain can cause jamming.

Note 4: Check fuser heat and back up rollers for dirt or toner contamination. Clean as necessary. **Always allow fuser to cool before cleaning.**

Use Caution! Fuser area is very hot.

Copyright 1997, Okidata, Division of OKI America, Inc. All rights reserved. See the OKIDATA Business Partner Exchange (BPX) for any updates to this material. (http://bpx.okidata.com)

Troubleshooting flow chart 7:

No recording paper cassette or not recording paper

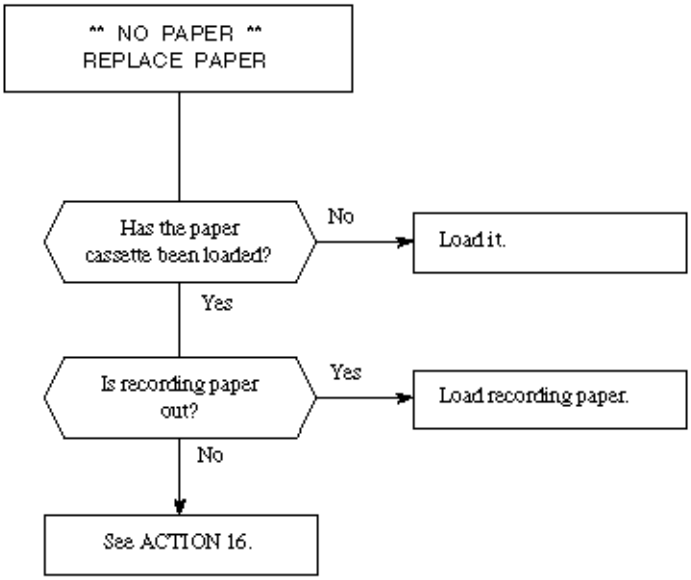

No.	ACTION
1	Check and/or replace MCNT board.
2	Check the following & replace if necessary.: POWER SUPPY UNIT Cover Open Switch Cover Open Switch connection MCNT Board
3	Check one way clutch gears for proper operation.
4	Replace cassette separator frame assy.
5	Check proper installation of MCNT board, POWER SUPPLY UNIT board, and their connectors.
6	Replace MCNT Board
7	Check FAN motor, MCNT Board
8	Check FAN motor, MCNT Board.

9	Check for spilled toner. Vacuum all toner from printer and clean toner carefully from all drive gears.
10	Check the connection between the power supply, contact assembly, fuser assembly, heater, and the thermostat.
11	Check PWU
12	Check entrance sensor lever, hopping roller, and registration motor for dirt. MCNT Board, cover open state.
13	Check cover open state, drum motor, drum motor gear, MCNT Board.
14	Check exit sensor lever, cover open state, PWU, MCNT Board
15	Check MCNT Board
16	Check paper sensor lever, PWU, MCNT Board

Action Items Diagram High voltage outputs (and measurement points) are connected to the contact assembly as shown in the diagram below.

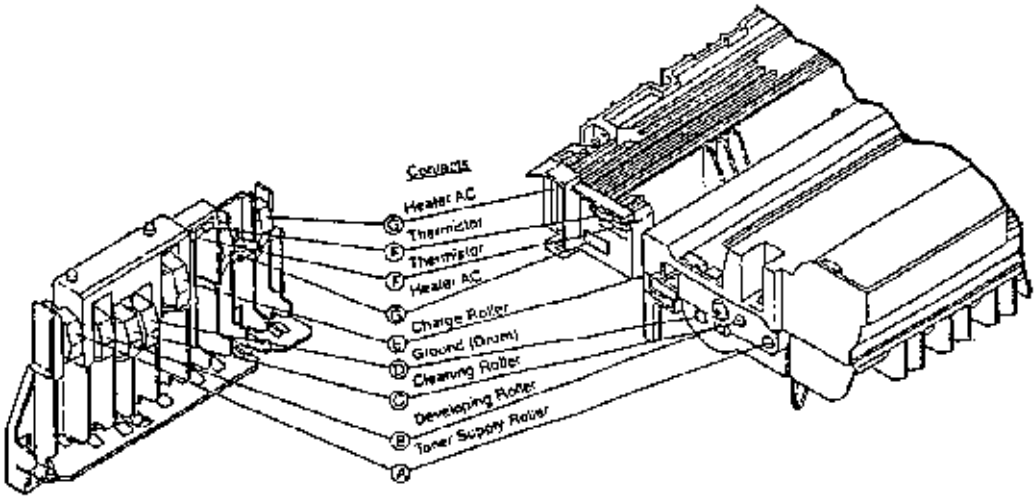

Table 7.22.3 Image Troubles
Always test with a known "good" Image Drum before beginning to troubleshoot print image problems. Be sure that the contact assembly makes positive contact with the power supply, drum, and fuser. Clean or adjust the contacts as necessary.

Abnormal Symptom	Reference Figure	Troubleshooting Flow Chart
Images are light or blurred as a whole.	Fig. A	8
The blank background is smeared.	Fig. B	9

Blank paper is output.	Fig. C	10
Black belts or black stripes in vertical direction.	Fig. D	11
Periodic abnormal printing.	Fig. E	12
Some parts not printed.	___	13
White belts or some white stripes in vertical direction	Fig. F	14
Poor fusing (Images are blurred or peeled off when touched by hands)	___	15

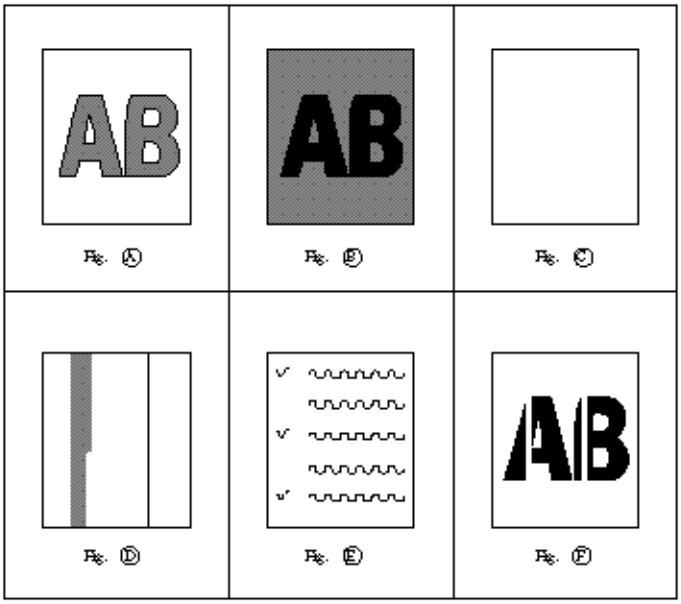

Figure 7.22.1 Abnormal Symptoms of Image Troubles (Example)

Copyright 1997, Okidata, Division of OKI America, Inc. All rights reserved. See the OKIDATA Business Partner Exchange (BPX) for any updates to this material. (http://bpx.okidata.com)

Troubleshooting flow chart 8:

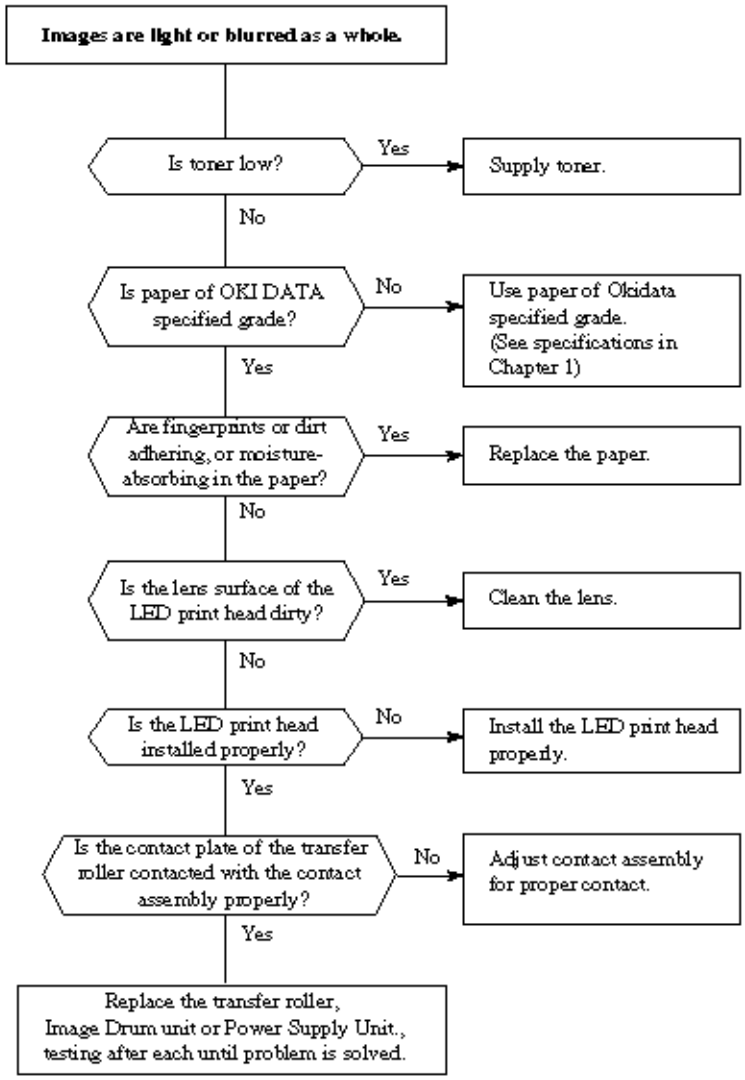

Copyright 1997, Okidata, Division of OKI America, Inc. All rights reserved. See the OKIDATA Business Partner Exchange (BPX) for any updates to this material. (http://bpx.okidata.com)

Troubleshooting flow chart 9:

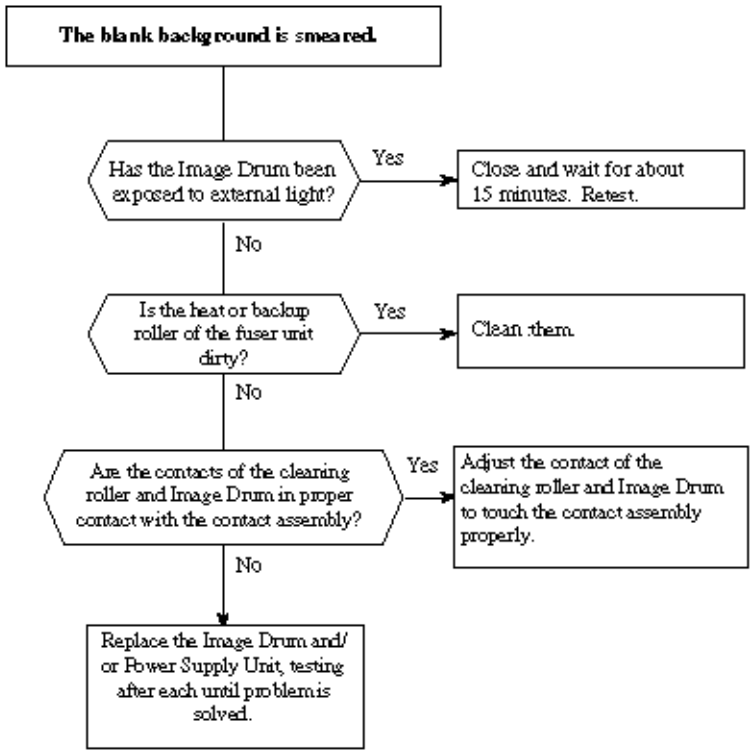

Copyright 1997, Okidata, Division of OKI America, Inc. All rights reserved. See the OKIDATA Business Partner Exchange (BPX) for any updates to this material. (http://bpx.okidata.com)

Troubleshooting flow chart 10:

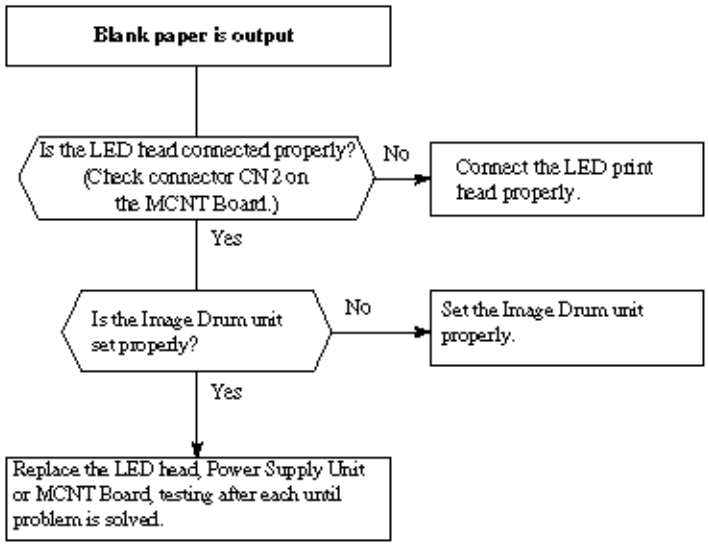

Copyright 1997, Okidata, Division of OKI America, Inc. All rights reserved. See the OKIDATA Business Partner Exchange (BPX) for any updates to this material. (http://bpx.okidata.com)

Troubleshooting flow chart 11:

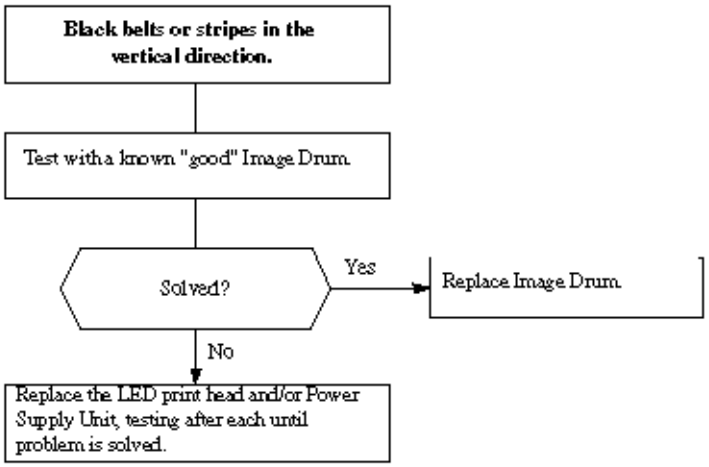

Copyright 1997, Okidata, Division of OKI America, Inc. All rights reserved. See the OKIDATA Business Partner Exchange (BPX) for any updates to this material. (http://bpx.okidata.com)

Troubleshooting flow chart 12:

This refers to repetitive "spots" or unusual marks on printed pages. Measure the distance between them to determine the problem.

Note: "ID" refers to the Image Drum.

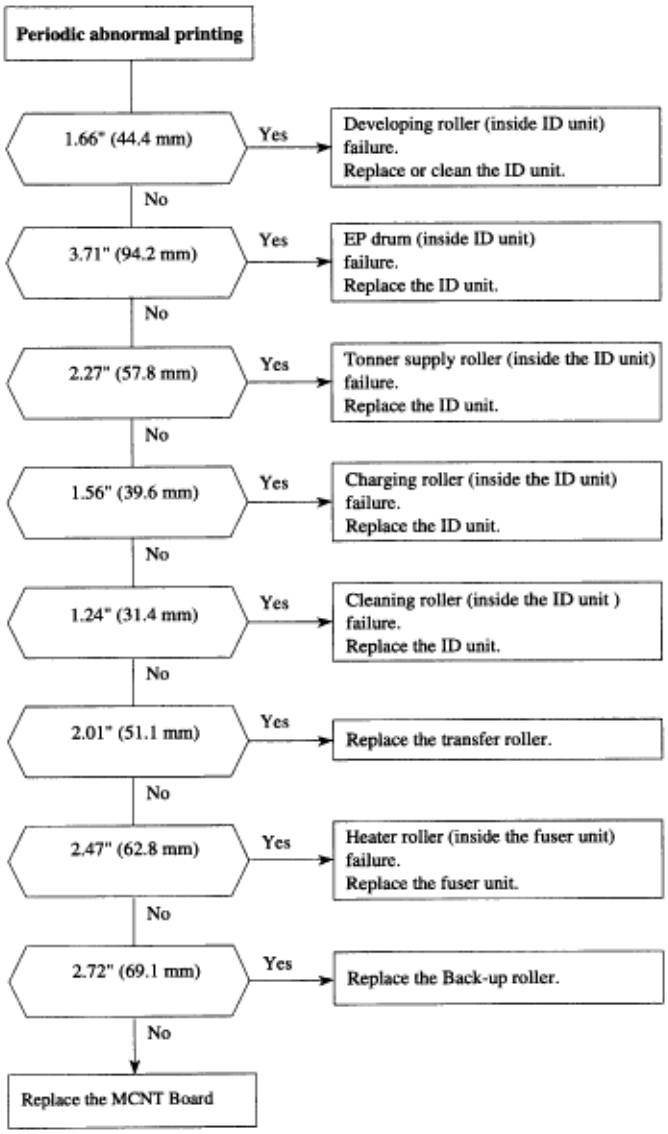

Copyright 1997, Okidata, Division of OKI America, Inc. All rights reserved. See the OKIDATA Business Partner Exchange (BPX) for any updates to this material. (http://bpx.okidata.com)

Troubleshooting flow chart 13:

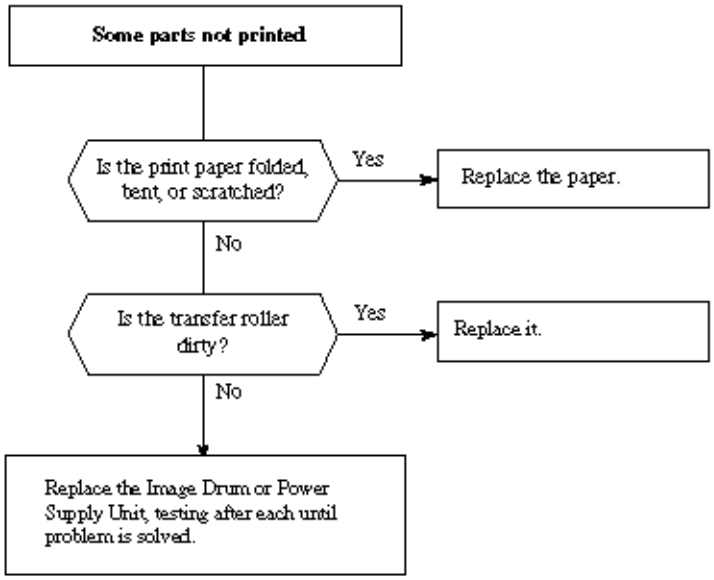

Copyright 1997, Okidata, Division of OKI America, Inc. All rights reserved. See the OKIDATA Business Partner Exchange (BPX) for any updates to this material. (http://bpx.okidata.com)

Troubleshooting flow chart 14: Troubleshooting flow chart 15:

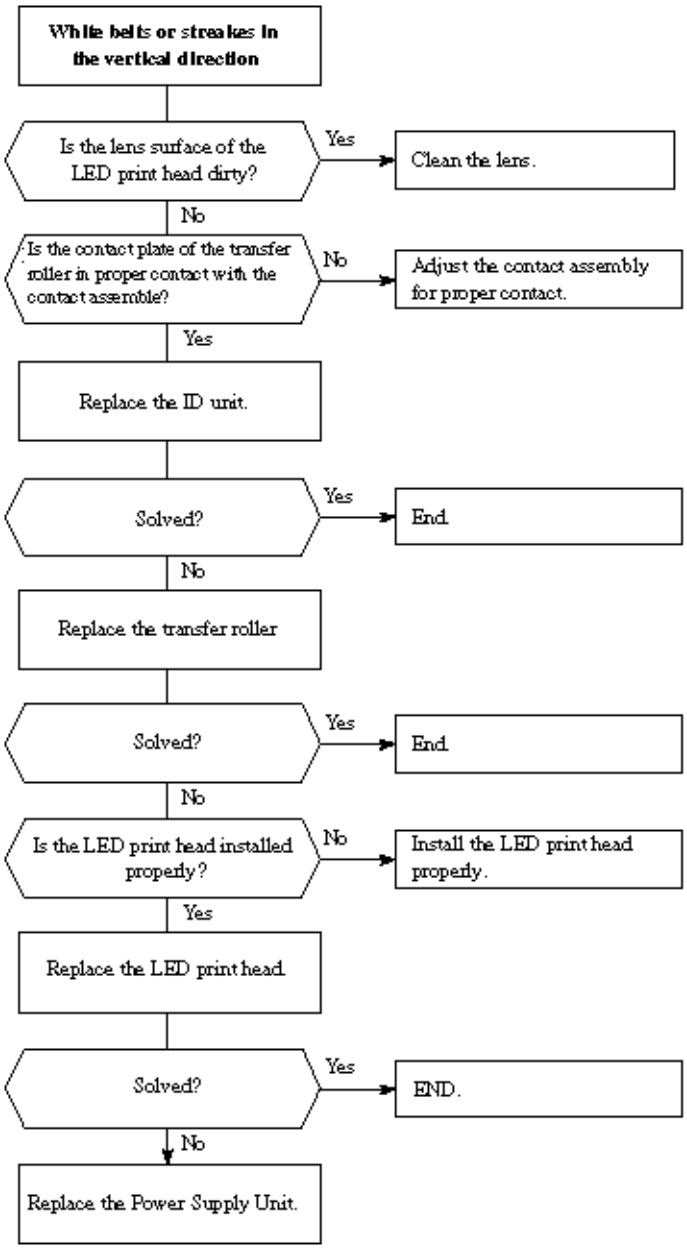

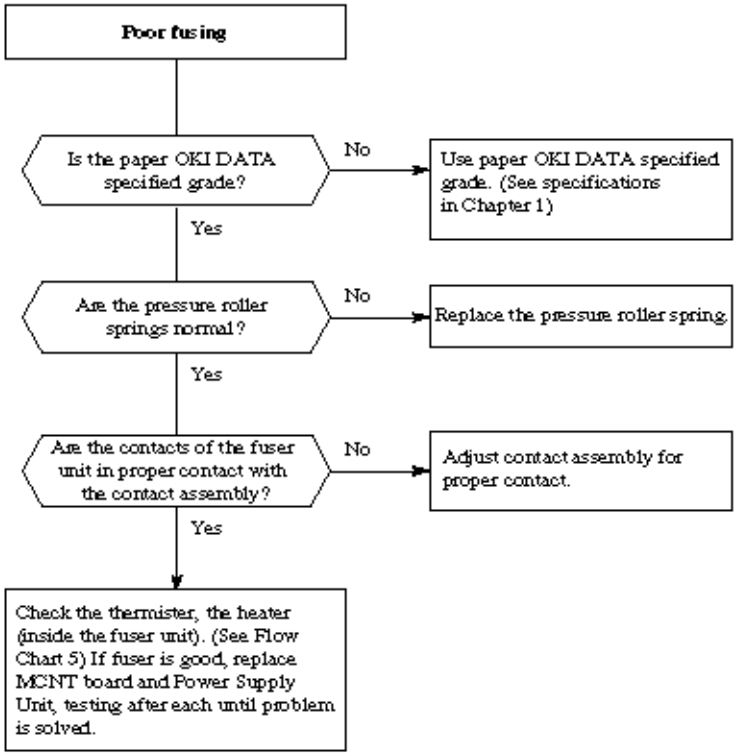

Copyright 1997, Okidata, Division of OKI America, Inc. All rights reserved. See the OKIDATA Business Partner Exchange (BPX) for any updates to this material. (http://bpx.okidata.com)

OKIFAX 1050

ASSEMBLY

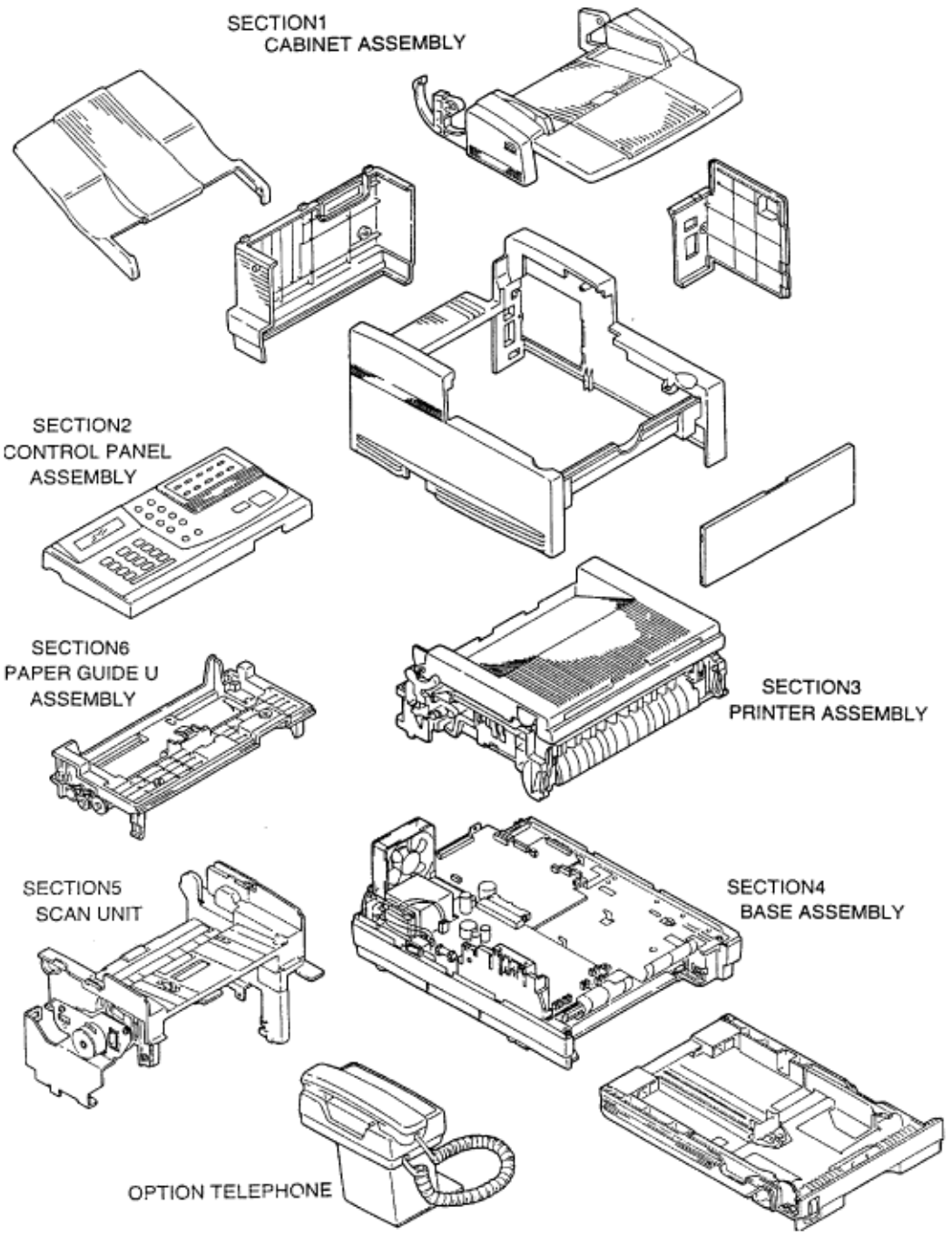

Copyright 1997, Okidata, Division of OKI America, Inc. All rights reserved. See the OKIDATA Business Partner Exchange (BPX) for any updates to this material. (http://bpx.okidata.com)

OKIFAX 2350/2450

ASSEMBLY

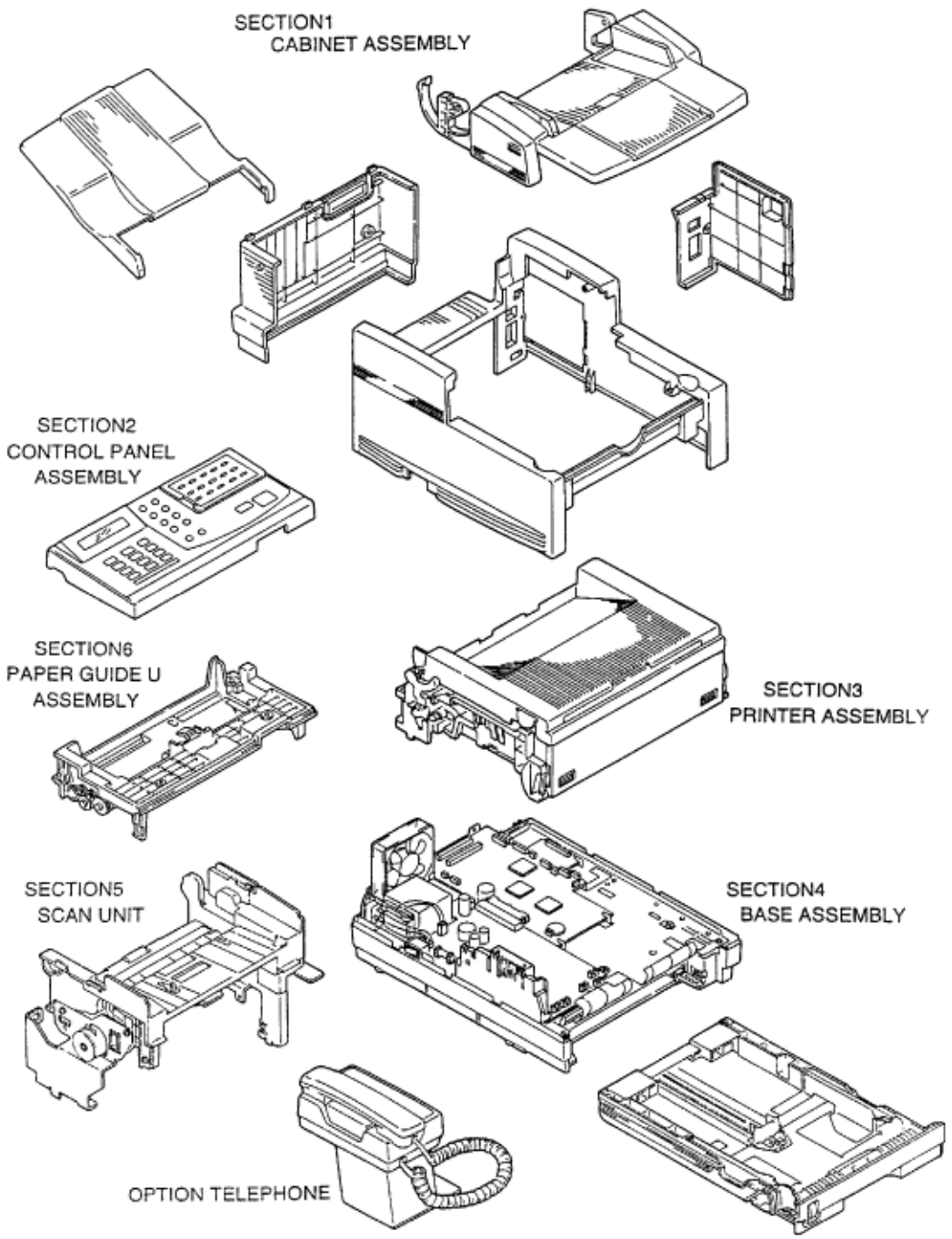

Copyright 1997, Okidata, Division of OKI America, Inc. All rights reserved. See the OKIDATA Business Partner Exchange (BPX) for any updates to this material. (http://bpx.okidata.com)

OKIFAX 1050

SECTION1 CABINET ASSEMBLY

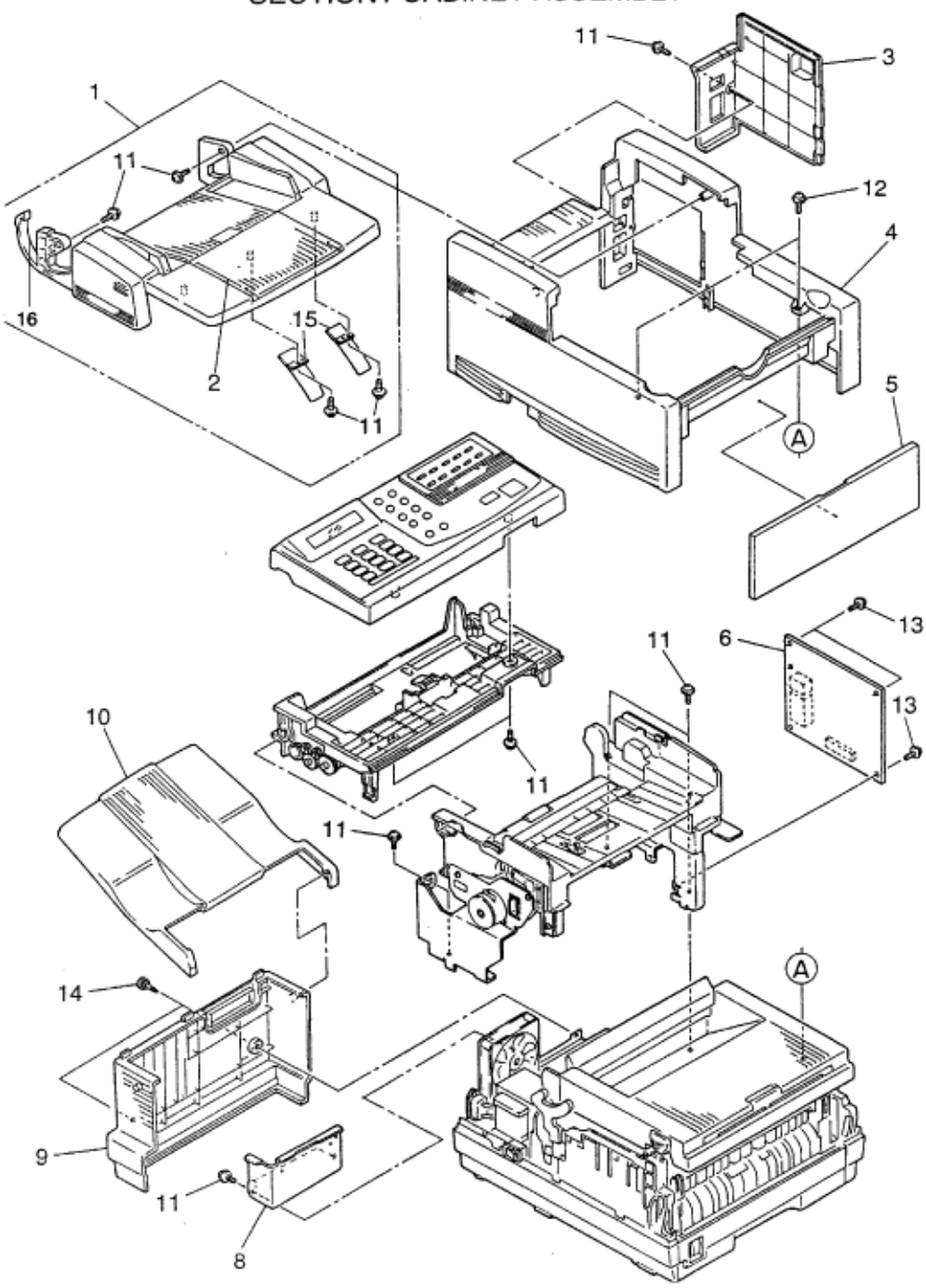

Copyright 1997, Okidata, Division of OKI America, Inc. All rights reserved. See the OKIDATA Business Partner Exchange (BPX) for any updates to this material. (http://bpx.okidata.com)

OKIFAX 2350/2450

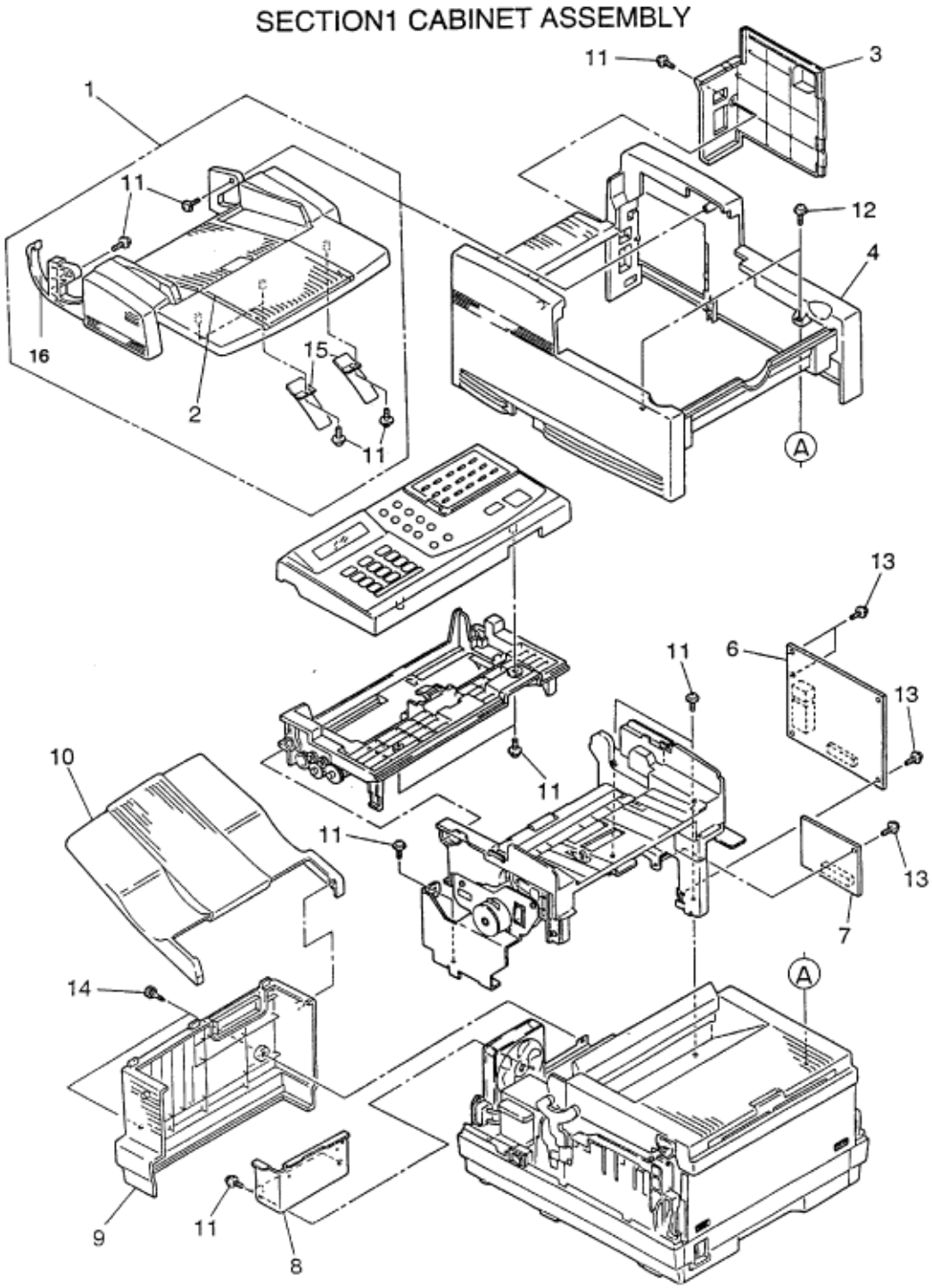

Section 1: Cabinet

Illustration Number	OKIFAX	Description	Okidata Part Number	Oki Part Number

1	1050/2350/2450	DOCUMENT HOPPER ASSY.	50607301	1PA4120-1079G1
2	1050/2350/2450	TRAY: SUB HOPPER	50220901	2PP4120-1084P1
3	1050/2350/2450	COVER: NCU	53075901	2PP4120-1091P1
4	1050/2350/2450	COVER: MAIN	53075801	1PP4120-1089P1
5	1050/2350/2450	COVER: FRONT	53075701	1PP4120-1092P1
6	1050/2350/2450	PCB: NCU-U	55079101	4YA4129-1008G1
7	2350	PCB: MODEM (9.6K)	55079201	4YA4135-1032G1
7	2350/2450	PCB: MODEM (14.4K)	55079202	4YA4135-1032G2
8	1050/2350/2450	PLATE: PARTITION	51019501	3PP4120-1088P1
9	1050/2350/2450	COVER: REAR	53076001	1PP4120-1090P1
10	1050/2350/2450	TRAY: STACKER	50221001	1PP4120-1093P1
11	1050/2350/2450	SCREW	N/A	+BTD3-8-IOF
12	1050/2350/2450	SCREW	N/A	4PB4083-2500P10
13	1050/2350/2450	SCREW	N/A	4PB4013-3102P2
14	1050/2350/2450	SCREW: KNOB	50317601	4PB4120-1136P1
15	1050/2350/2450	GUIDE: ASSIST	51019601	4PP4120-1161G1
16	1050/2350/2450	SPRING: METAL TENSION	50930601	4PP4120-1107P1

Copyright 1997, Okidata, Division of OKI America, Inc. All rights reserved. See the OKIDATA Business Partner Exchange (BPX) for any updates to this material. (http://bpx.okidata.com)

OKIFAX 1050

SECTION2 CONTROL ASSEMBLY

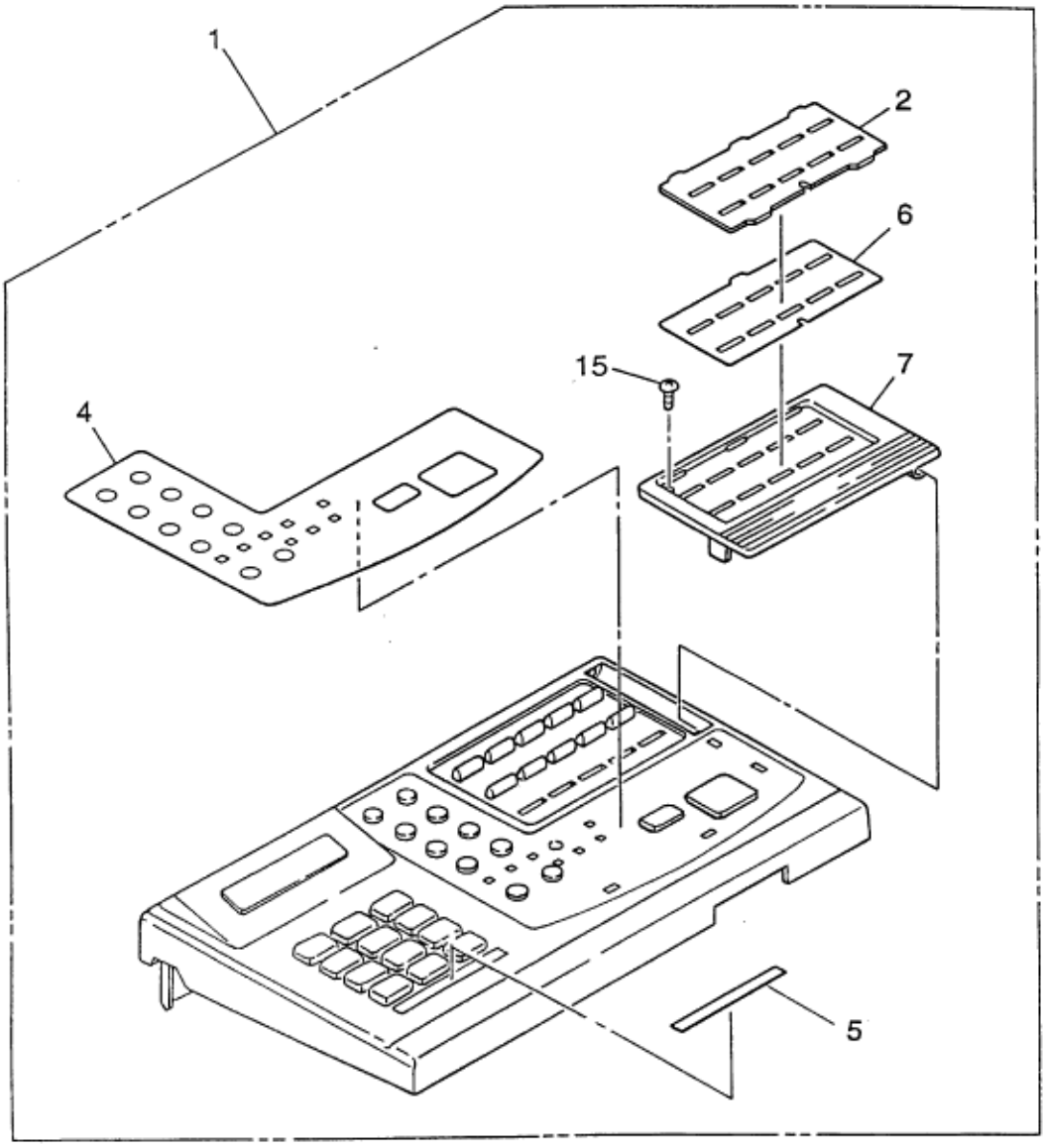

Copyright 1997, Okidata, Division of OKI America, Inc. All rights reserved. See the OKIDATA Business

Partner Exchange (BPX) for any updates to this material. (http://bpx.okidata.com)

OKIFAX 2350

SECTION2 CONTROL ASSEMBLY

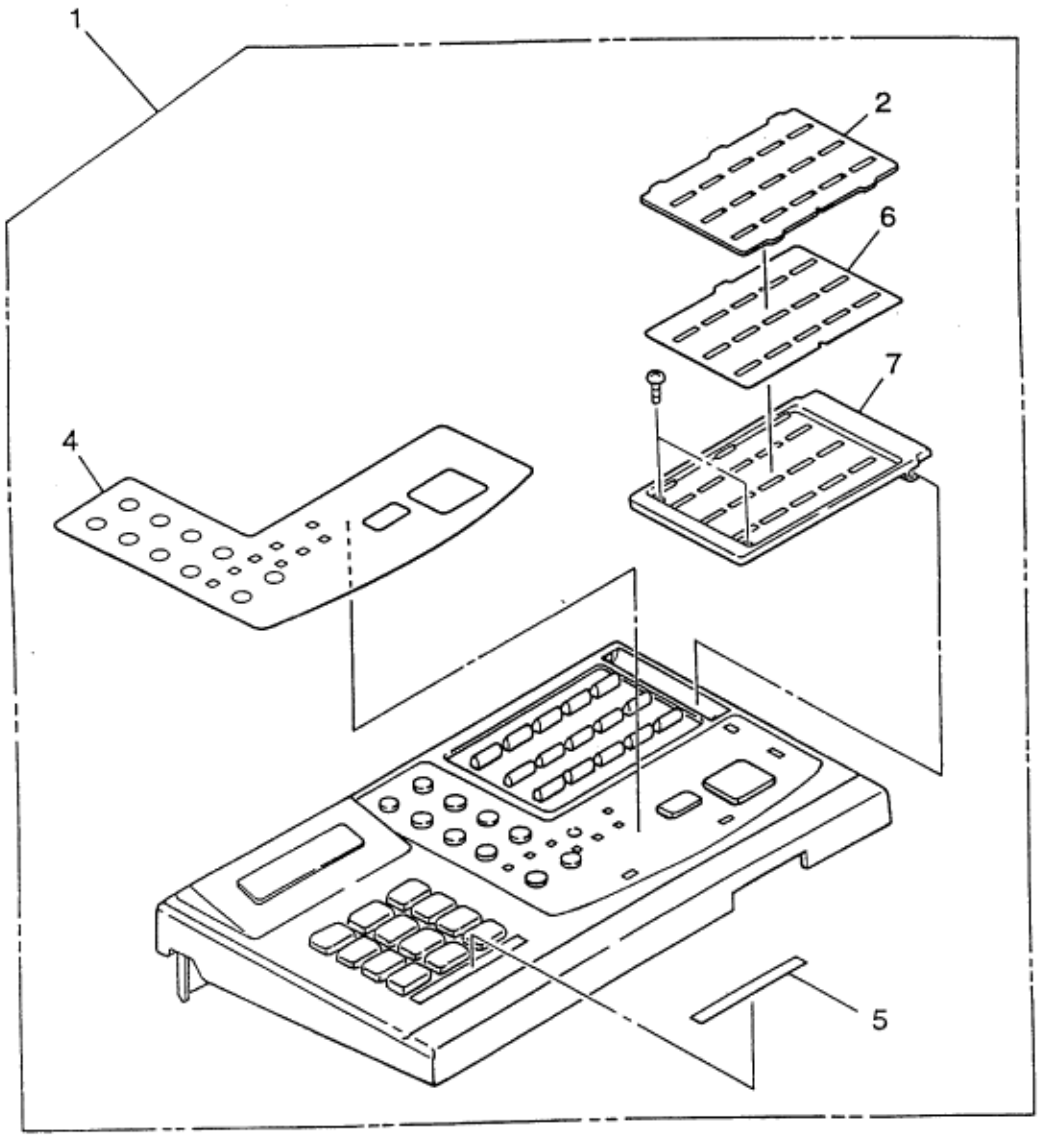

Copyright 1997, Okidata, Division of OKI America, Inc. All rights reserved. See the OKIDATA Business

Partner Exchange (BPX) for any updates to this material. (http://bpx.okidata.com)

OKIFAX 2450

SECTION2 CONTROL ASSEMBLY

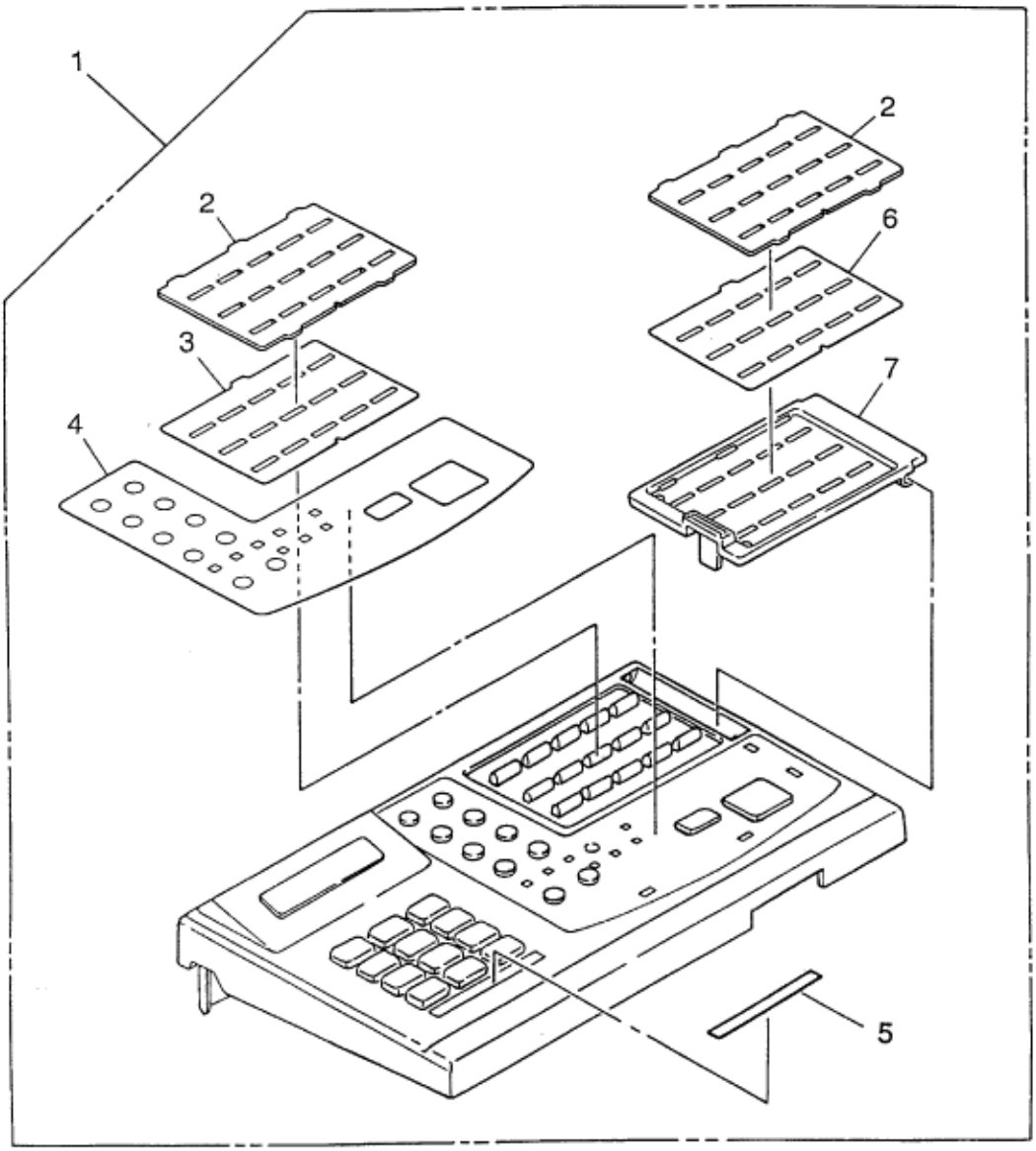

Section 2: Control

Illustration Number	OKIFAX	Description	Okidata Part Number	Oki Part Number
1	1050	PANEL: CONTROL ASSY.	50112310	4YA4120-1056G10
1	2350	PANEL: CONTROL ASSY.	50112311	4YA4120-1056G110
1	2450	PANEL: CONTROL ASSY.	50112321	4YA4120-1056G210
2	1050	FILM: ONE TOUCH COVER	52203201	4PB4120-1102P1
2	2350/2450	FILM: ONE TOUCH COVER	52203301	4PB4120-1074P1
3	2450	SHEET: ONE TOUCH (L)	52081310	4PB4120-1073P101
4	1050	FUNCTION SHEET	N/A	3PB4120-1070P10
4	2350	FUNCTION SHEET	N/A	3PB4120-1070P110
4	2450	FUNCTION SHEET	N/A	3PB4120-1070P210
5	1050/2350/2450	TEN KEY LABEL	N/A	4PB4014-4776P201
6	1050	SHEET: ONE TOUCH	52081201	4PB4120-1101P1
6	2350/2450	SHEET: ONE TOUCH (U)	52081301	4PB4120-1073P1
7	1050	COVER: ONE TOUCH	N/A	1PP4120-1112P1
7	2350	COVER: ONE TOUCH	N/A	1PP4120-1111P1
7	2450	COVER: ONE TOUCH	53076101	1PP4120-1072P1

Copyright 1997, Okidata, Division of OKI America, Inc. All rights reserved. See the OKIDATA Business Partner Exchange (BPX) for any updates to this material. (http://bpx.okidata.com)

OKIFAX 2350/2450

SECTION3 PRINTER ASSEMBLY

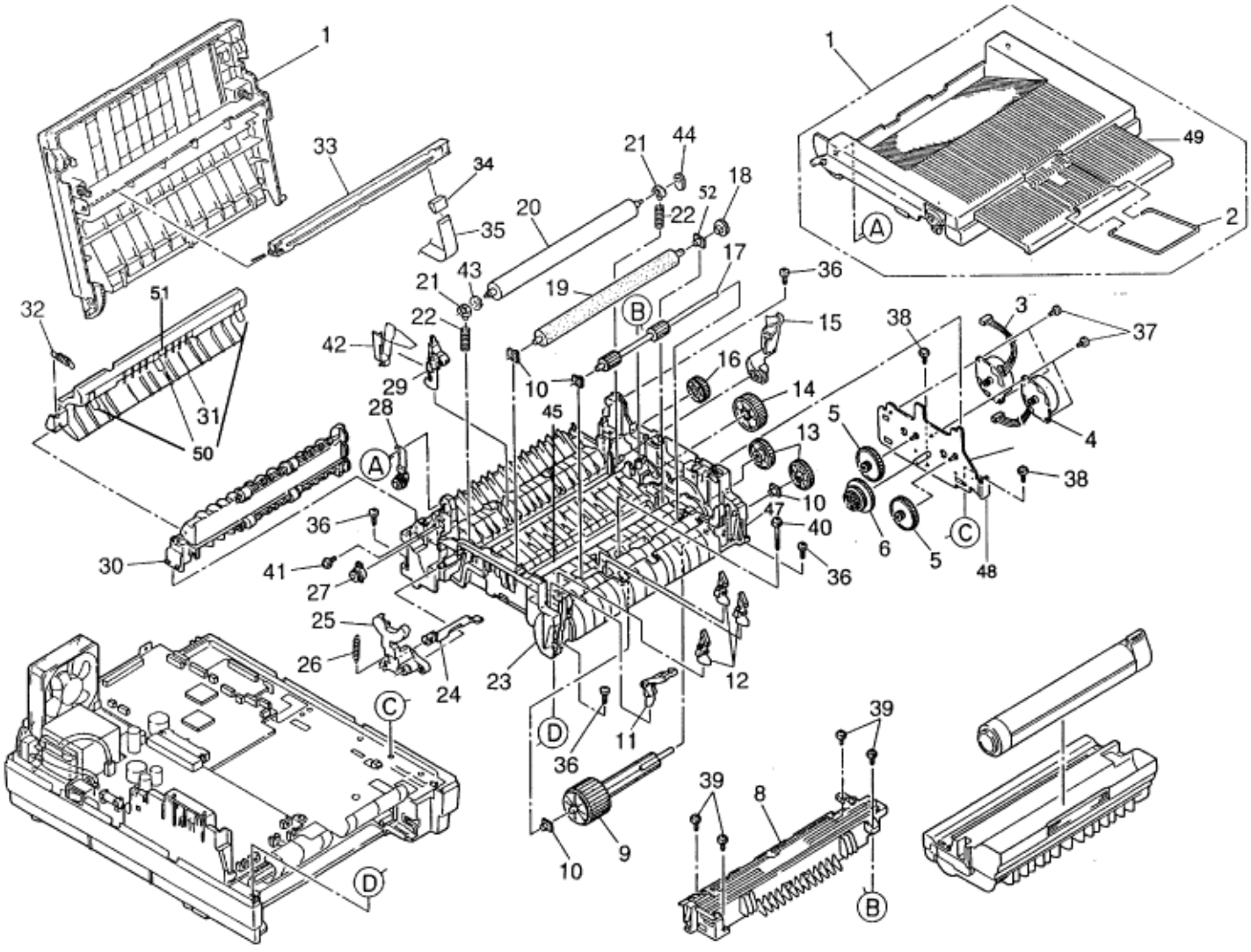

Copyright 1997, Okidata, Division of OKI America, Inc. All rights reserved. See the OKIDATA Business Partner Exchange (BPX) for any updates to this material. (http://bpx.okidata.com)

OKIFAX 1050

SECTION3 PRINTER ASSEMBLY

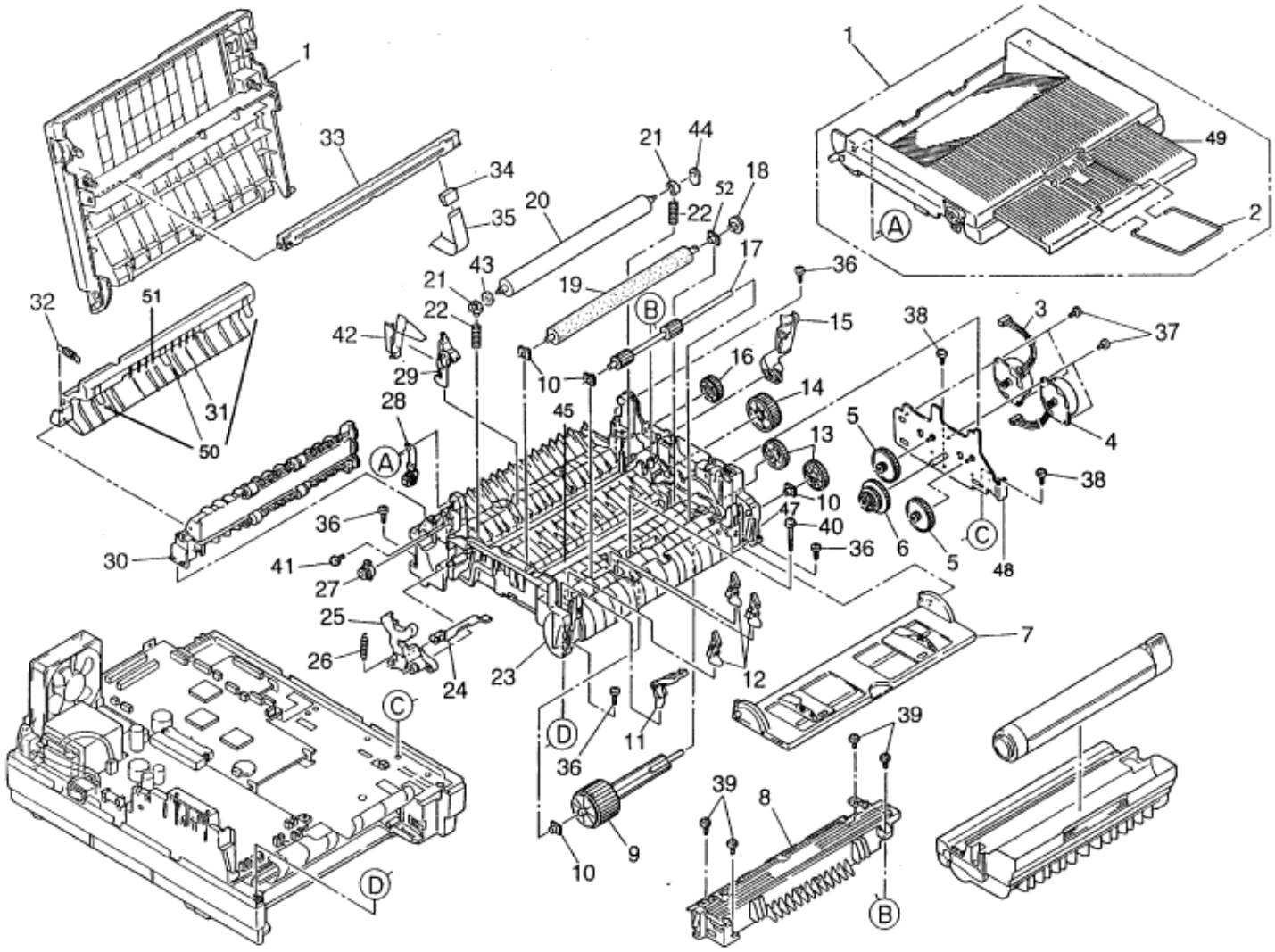

Section 3: Printer

Illustration Number	OKIFAX	Description	Okidata Part Number	Oki Part Number

1	1050/ 2350/ 2450	COVER: FACE DOWN STACKER ASSY.	53069008	2PA4083-6160G8
2	1050/ 2350/ 2450	WIRE: GUIDE	51013801	4PB3517-1567P1
3	1050	MOTOR: MAIN STEPPER	56511303	4PB4122-1243P3
3	2350/ 2450	MOTOR: MAIN STEPPER	56512701	4YB4120-1117P1
4	1050	MOTOR: REGISTRATION STEPPER	56511302	4PB4122-1243P2
4	2350/ 2450	MOTOR: REGISTRATION STEPPER	56512601	4YB4120-1118P1
5	1050/ 2350/ 2450	GEAR: STEPPER MOTOR IDLE	51225701	4PP4083-2593P1
6	1050/ 2350/ 2450	GEAR: REDUCTION	51229301	3PP4083-6076P1
7	2350/ 2450	GUIDE: MANUAL FEED ASSY.	51011001	2PA4083-6130G1
8	1050/ 2350/ 2450	UNIT: FUSER 120V ASSY.	50220801	2YX4120-1128G1
9	1050/ 2350/ 2450	SHAFT: HOPPING ROLLER ASSY.	50219601	3PA4122-1295G1
10	1050/ 2350/ 2450	BEARING	50607401	4PP4083-6022P2
11	1050/ 2350/ 2450	SENSOR: TONER	50405501	4PP4083-6086G1
12	1050/ 2350/ 2450	PLATE: SENSOR (INLET)	51010701	4PP4083-6083P1
13	1050/ 2350/ 2450	GEAR: ONE WAY CLUTCH	51228901	4PB4083-6024P1
14	1050/ 2350/ 2450	GEAR: FUSER ROLLER IDLE	51229101	4PP4083-6080P1

15	1050/ 2350/ 2450	LEVER: RESET (R)	50805901	3PP4083-6054P1
16	1050/ 2350/ 2450	GEAR: EJECT ROLLER IDLE	51229201	4PP4083-6081P1
17	1050/ 2350/ 2450	ROLLER: REGISTRATION (F)	50407001	3PB4122-1281P1
18	1050/ 2350/ 2450	GEAR: TR	51236601	3PP4083-6290P1
19	1050/ 2350/ 2450	ROLLER: TRANSFER	50409301	3YB4083-7640P1
20	1050/ 2350/ 2450	ROLLER: BACK UP	53343702	3PB4083-6064P2
21	1050/ 2350/ 2450	BUSHING: PRESSURE ROLLER	51607601	4PP4083-6052P1
22	1050/ 2350/ 2450	SPRING: BIAS	50925301	4PP4083-6065P1
23	1050/ 2350/ 2450	BASE: LOWER SUB ASSY.	50220701	1PA4120-1157G1
24	1050/ 2350/ 2450	ARM: COVER OPEN	53068901	3PP4083-6058P1
25	1050/ 2350/ 2450	LEVER: RESET (L)	50805801	3PP4083-6053P1
26	1050/ 2350/ 2450	SPRING: STACKER COVER RESET	50924201	4PP4083-6057P1
27	1050/ 2350/ 2450	GEAR: STACKER COVER DAMPER	51229401	4PB4083-6197P1
28	1050/ 2350/ 2450	ARM: STACKER COVER DAMPER	53069101	4PP4083-6191G1

29	1050/ 2350/ 2450	LEVER: EXIT SENSOR ASSY.	51010802	4PA4083-6025G1
30	1050/ 2350/ 2450	ROLLER: EXIT ASSY.	50409901	2PA4120-1129G1
31	1050/ 2350/ 2450	GUIDE: RELEASE ASSY.	51019201	2PA4120-1085G1
32	1050/ 2350/ 2450	SPRING: RELEASE	50930001	4PP4120-1087P1
33	1050/ 2350/ 2450	LED HEAD	56110802	4YA4116-1115G2
34	1050/ 2350/ 2450	CONNECTOR: PC	56730201	224A1286P0140
35	1050/ 2350/ 2450	CABLE: LED ASSY.	56632401	4YX4120-1124G1
36	1050/ 2350/ 2450	SCREW	N/A	T2P4-12HHC
37	1050/ 2350/ 2450	SCREW	N/A	4PB4013-3104P5
38	1050/ 2350/ 2450	SCREW	N/A	+BTD3-8-IOF
39	1050/ 2350/ 2450	SCREW	N/A	4PB4083-2500P10
40	1050/ 2350/ 2450	SCREW	N/A	4PB4013-3100P25
41	1050/ 2350/ 2450	SCREW	N/A	4PB4083-2500P8
42	1050/ 2350/ 2450	WIRE: SENSOR ASSY.	56633001	4PA4120-1170G1

43	1050/ 2350/ 2450	WASHER: B	50517001	4PP4120-1209P1
44	1050/ 2350/ 2450	WASHER: C	50517201	4PP4120-1210P1
45	1050/ 2350/ 2450	STRIP: ANTI STATIC	51010903	4PB4083-3182P3
46	1050/ 2350/ 2450	CONTACT: GROUND CLIP LED HEAD	51014601	4PP4083-6173P1
47	1050/ 2350/ 2450	BEARING: REGISTRATION ROLLER	51607501	4PP4083-6031P1
48	1050/ 2350/ 2450	BRACKET: MOTOR	51709901	3PP4083-6071G1
49	1050/ 2350/ 2450	TRAY: STACKER COVER EXT.	50104801	2PP4083-6162P1
50	1050/ 2350/ 2450	FILM: STACKER MYLAR	52203401	4PB4120-1138P1
51	1050/ 2350/ 2450	BRUSH: STATIC: RELEASE GUIDE	51305103	4PB4120-1051P3
52	1050/ 2350/ 2450	BEARING: TR	51609001	3PP4083-6289P1

Copyright 1997, Okidata, Division of OKI America, Inc. All rights reserved. See the OKIDATA Business Partner Exchange (BPX) for any updates to this material. (http://bpx.okidata.com)

OKIFAX 1050

SECTION4 BASE ASSEMBLY

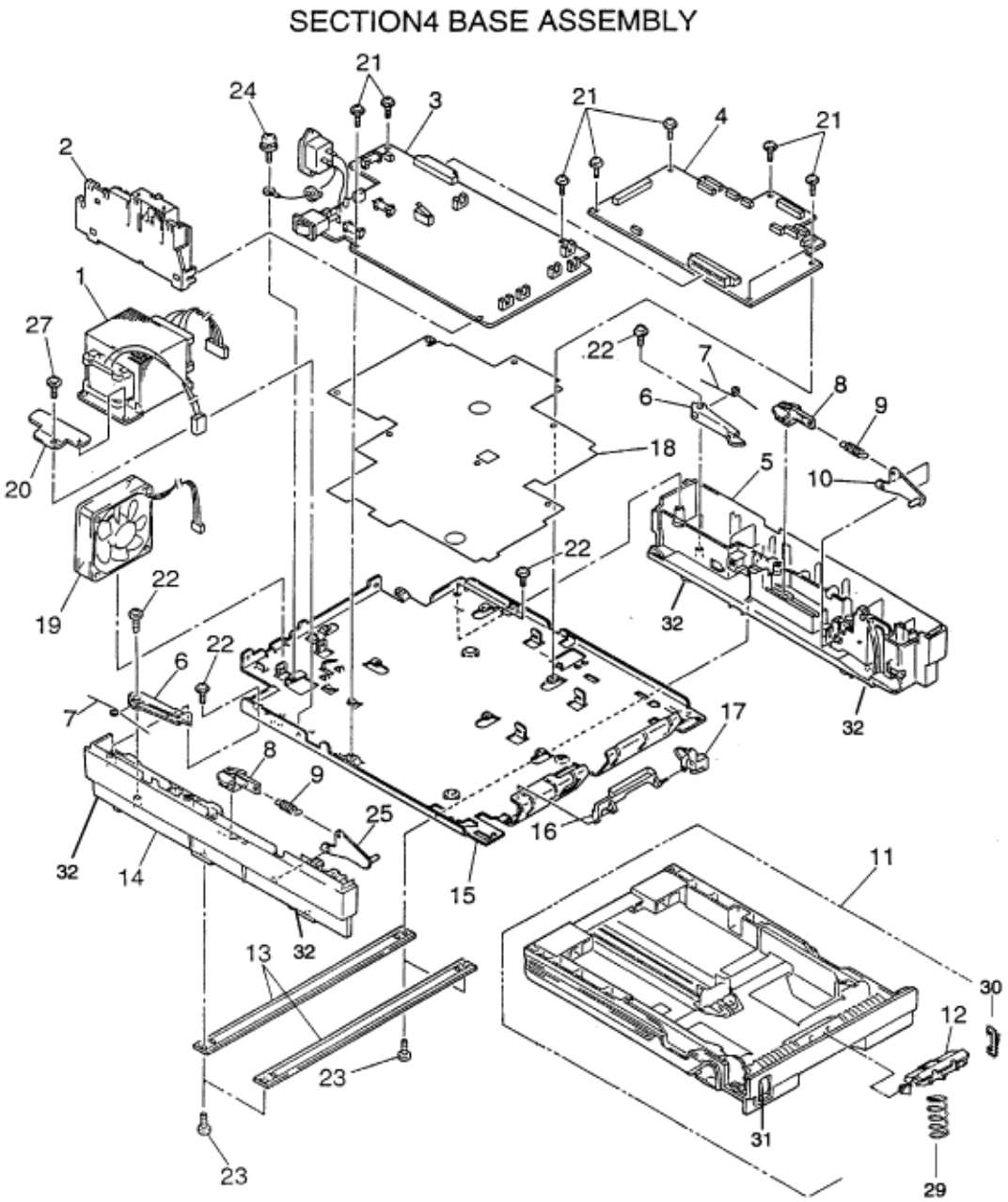

Copyright 1997, Okidata, Division of OKI America, Inc. All rights reserved. See the OKIDATA Business Partner Exchange (BPX) for any updates to this material. (http://bpx.okidata.com)

OKIFAX 2350/2450

Section 4: Base Assembly

Illustration No.	OKIFAX	Description	Okidata Part Number	Oki Part Number
1	1050	POWER TRANSFORMER (120V)	56414701	4YB4049-7032P1
1	2350/ 2450	POWER TRANSFORMER (120V)	56414801	4YB4049-7082P1
2	1050/ 2350/ 2450	ASSY: CONTACT	56730001	3PA4083-6090G1
3	1050/ 2350/ 2450	POWER SUPPLY UNIT (120V)	56414601	4YA4049-7109G1
4	1050	PCB: MAIN CONTROL	55079001	4YA4134-1031G1
4	2350	PCB: MAIN CONTROL	55079011	4YA4134-1031G11
4	2450	PCB: MAIN CONTROL	55079012	4YA4134-1031G12
5	1050/ 2350/ 2450	GUIDE: CASSETTE (R) ASSY.	51019101	3PP4083-7671G1
6	1050/ 2350/ 2450	LEVER: CASSETTE LOCK	50808401	3PP4083-7653P1
7	1050/ 2350/ 2450	SPRING: CASSETTE LOCK	50929501	4PP4083-7655P1
8	1050/ 2350/ 2450	BLOCK: LINK PULL	53345201	4PP4122-1170P1
9	1050/ 2350/ 2450	SPRING: SHEET	50929901	4PP4083-7666P1

10	1050/ 2350/ 2450	LINK: SHEET (R)	50808601	4PP4083-7658G1
11	1050/ 2350/ 2450	CASSETTE: PAPER ASSY.	50110501	1PA4120-1162G1
12	1050/ 2350/ 2450	FRAME: SEPARATION ASSY.	53345601	3PP4083-5663G1
13	1050/ 2350/ 2450	BEAM	51608801	3PP4083-7660P1
14	1050/ 2350/ 2450	GUIDE: CASSETTE (L) ASSY.	51019001	3PP4083-7670G1
15	1050/ 2350/ 2450	PLATE: BASE SUB ASSY.	51018901	1PA4120-1158G1
16	1050/ 2350/ 2450	PLATE: CASSETTE SENSOR	51011501	3PP4083-6154P1
17	1050/ 2350/ 2450	PLATE: PAPER SUPPLY SENSOR	51019701	4PP4083-7667P1
18	1050/ 2350/ 2450	INSULATOR	51711301	2PB4120-1103P1
19	1050/ 2350/ 2450	MOTOR: FAN	56512801	4YB4120-1119P1
20	1050/ 2350/ 2450	PLATE: TRANSFORMER DUMMY	51019801	4PP4120-1100P1
21	1050/ 2350/ 2450	SCREW	N/A	4PB4013-3102P2
22	1050/ 2350/ 2450	SCREW	N/A	4PB4083-2500P10
23	1050/ 2350/ 2450	SCREW	N/A	+T2P3-8-HHC

24	1050/ 2350/ 2450	SCREW	N/A	+P(SW+W)4-6-HH C
25	1050/ 2350/ 2450	LINK: SHEET (L)	50808501	4PP4083-7657G1
26	2450	BATTERY: BACK UP	56306901	4YB4120-1094P1
27	1050	SCREW	N/A	+BTD3-8-IOF
27	2350/ 2450	SCREW	N/A	+BTD3-8-IOF
28	2350/ 2450	SCREW	N/A	+TP2.6-8-HHC
29	1050/ 2350/ 2450	SPRING: SEPARATOR	50930701	4PP4083-7728P1
30	1050/ 2350/ 2450	SPRING: ANTI VIBRATION	50926901	4PP4083-6228P1
31	1050/ 2350/ 2450	INDICATOR: PAPER SUPPLY	57001501	3PP4122-1171P1
32	1050/ 2350/ 2450	FOOT: RUBBER	50806104	4PB4016-1960P4

Copyright 1997, Okidata, Division of OKI America, Inc. All rights reserved. See the OKIDATA Business Partner Exchange (BPX) for any updates to this material. (http://bpx.okidata.com)

OKIFAX 1050/2350/2450

SECTION5 SCAN UNIT

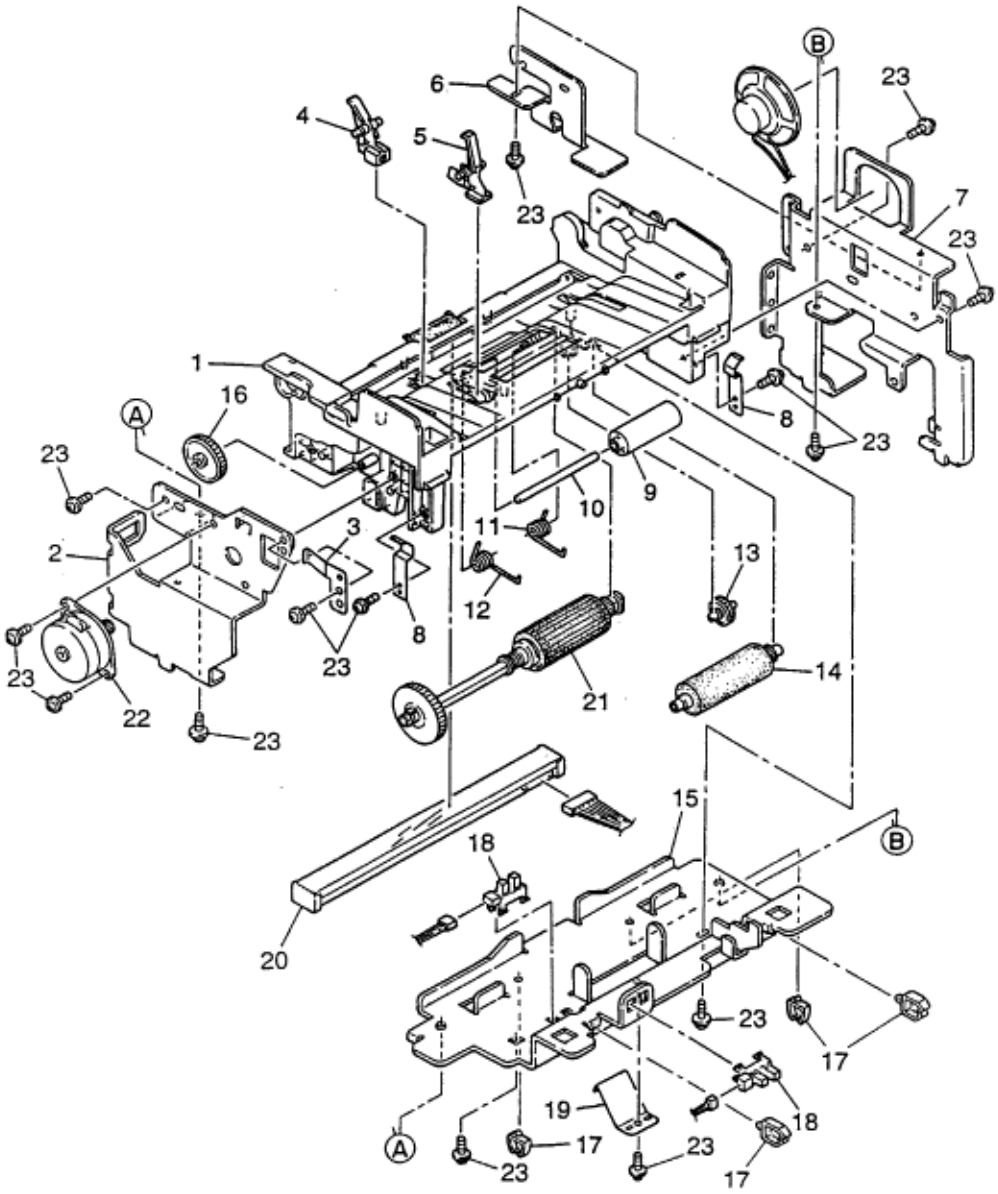

Section 5: Scan Unit

Illustration No.	OKIFAX	Description	Okidata Part Number	Oki Part Number
1	1050/ 2350/ 2450	FRAME: SCANNER SUB ASSY.	53348001	2PA4120-1160G1
2	1050/ 2350/ 2450	BASE: SCANNER (L)	50221101	2PP4120-1034P1
3	1050/ 2350/ 2450	PLATE: ADF GROUND	51019901	4PP4120-1023P1
4	1050/ 2350/ 2450	LEVER: PC2	50808801	3PP4120-1017P1
5	1050/ 2350/ 2450	LEVER: PC1	50808701	3PP4120-1016P1
6	1050/ 2350/ 2450	PLATE: POCKET	51020001	3PP4120-1038P1
7	1050/ 2350/ 2450	BASE: SCANNER (R)	50221201	2PP4120-1037P1
8	1050/ 2350/ 2450	SPRING: LATCH	50930101	4PP4120-1032P1
9	1050/ 2350/ 2450	ROLLER: PINCH	50406201	4PP3529-5045P1
10	1050/ 2350/ 2450	SHAFT: PINCH ROLLER	51113701	4PP4120-1020P1
11	1050/ 2350/ 2450	SPRING: PINCH (R)	50930301	4PP4120-1022P1
12	1050/ 2350/ 2450	SPRING: PINCH (L)	50930201	4PP4120-1021P1
13	1050/ 2350/ 2450	GEAR: ADF IDLE	51229501	4PP3529-5033P1

14	1050/ 2350/ 2450	ROLLER: SUB (ASSY)	50406101	4PA3529-5082G1
15	1050/ 2350/ 2450	PLATE: SCANNER BOTTOM	51020101	2PP4120-1029P1
16	1050/ 2350/ 2450	GEAR: Z81/15	51236301	4PP3529-5039P1
17	1050/ 2350/ 2450	CLAMP: MINI	50708701	4PB3527-5803P1
18	1050/ 2350/ 2450	SENSOR: PHOTO	50410001	4YB4120-1137P1
19	1050/ 2350/ 2450	SPRING: SCANNER	50930401	4PP4120-1030P1
20	1050/ 2350/ 2450	SENSOR: CONTACT IMAGE	50410101	4YB4120-1121P1
21	1050/ 2350/ 2450	ROLLER: ADF ASSY.	50410201	3PA4120-1018G1
22	1050	MOTOR: SCAN	56512901	4YB4120-1035P1
22	2350/ 2450	MOTOR: SCAN	56513101	4YB4120-1036P1
23	1050/ 2350/ 2450	SCREW	N/A	+BTD3-8-10F

Copyright 1997, Okidata, Division of OKI America, Inc. All rights reserved. See the OKIDATA Business Partner Exchange (BPX) for any updates to this material. (http://bpx.okidata.com)

OKIFAX 1050/2350/2450

SECTION6 PAPER GUIDE U ASSEMBLY

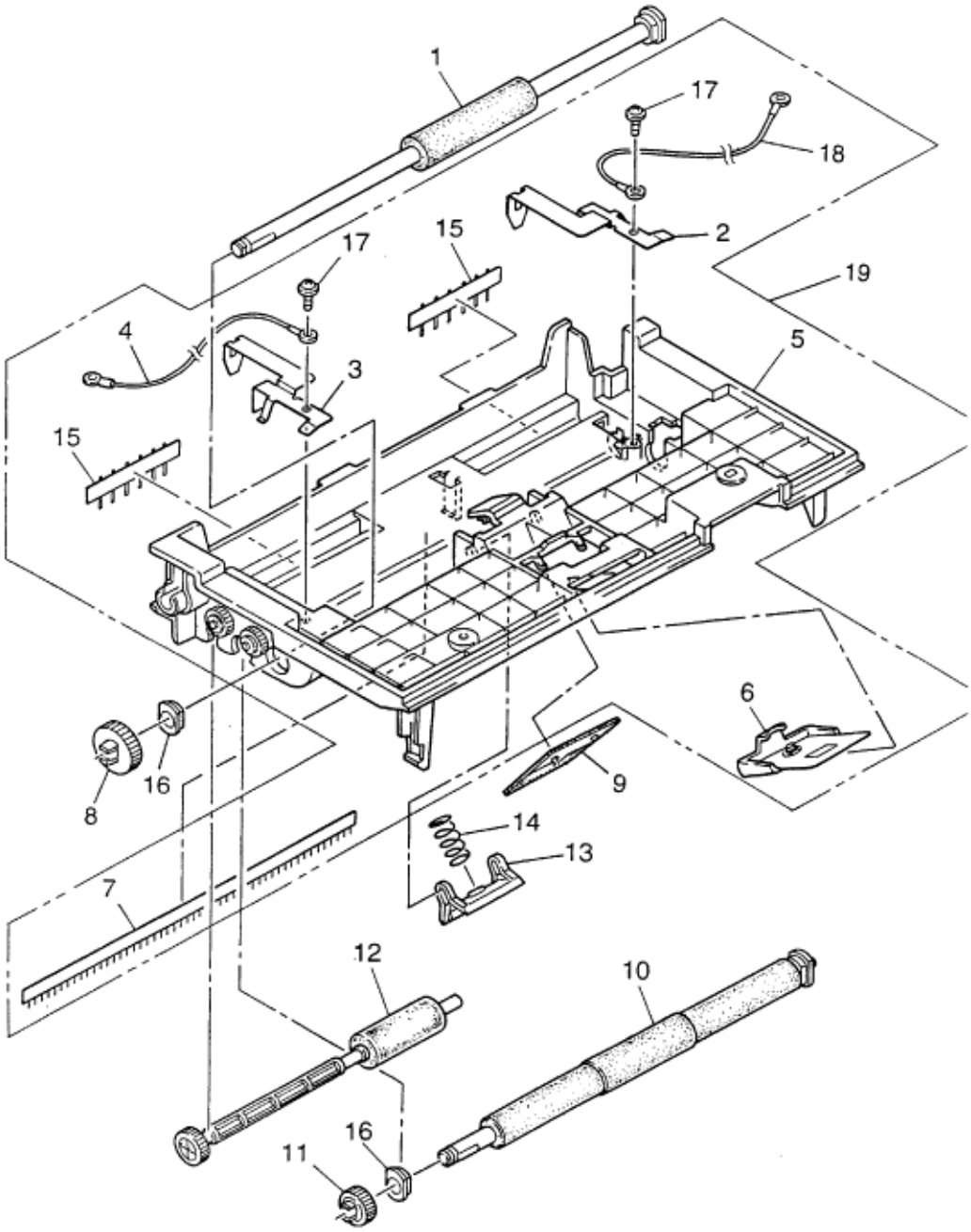

Section 6: Paper Guide

Illustration No.	OKIFAX	Description	Okidata Part Number	Oki Part Number

1	1050/ 2350/ 2450	ROLLER: FEED (1) ASSY.	50410301	3PA4120-1045G1
2	1050/ 2350/ 2450	PLATE: GROUND (SR)	51020201	4PP4120-1047P1
3	1050/ 2350/ 2450	PLATE: GROUND (SL)	51020301	4PP4120-1048P1
4	1050/ 2350/ 2450	GROUND WIRE	N/A	4YS4011-1714P2
5	1050/ 2350/ 2450	GUIDE: PAPER (U) SUB ASSY.	51020401	2PA4120-1159G1
6	1050/ 2350/ 2450	PLATE: PINCH ASSY.	51020501	4PA4120-1041G1
7	1050/ 2350/ 2450	BRUSH: GROUND	51305101	4PB4120-1051P1
8	1050/ 2350/ 2450	GEAR: Z28	51236401	4PP3529-5035P1
9	1050/ 2350/ 2450	RUBBER: SEPARATOR ASSY.	53344901	4PA3529-5087G1
10	1050/ 2350/ 2450	ROLLER: SENSOR ASSY.	51410501	3PA4120-1049G1
11	1050/ 2350/ 2450	GEAR: Z22	51236501	4PP3529-5034P1
12	1050/ 2350/ 2450	ROLLER: EXIT ASSY.	51410401	3PA4120-1052G1
13	1050/ 2350/ 2450	PLATE: ADF BACK UP	53339801	4PP3527-5153P1
14	1050/ 2350/ 2450	SPRING: ADF	50930501	4PP4120-1044P1

15	1050/ 2350/ 2450	BRUSH: GROUND	51305102	4PB4120-1051P2
16	1050/ 2350/ 2450	BEARING	51608901	4PP3522-3568P1
17	1050/ 2350/ 2450	SCREW	N/A	+BTP3-8-IOF
18	1050/ 2350/ 2450	GROUND WIRE	N/A	4YS4011-1714P3
19	1050/ 2350/ 2450	FRAME: PAPER GUIDE (U) ASSY.	51020601	2PA4120-1213G1

Copyright 1997, Okidata, Division of OKI America, Inc. All rights reserved. See the OKIDATA Business Partner Exchange (BPX) for any updates to this material. (http://bpx.okidata.com)

OKIFAX 1050

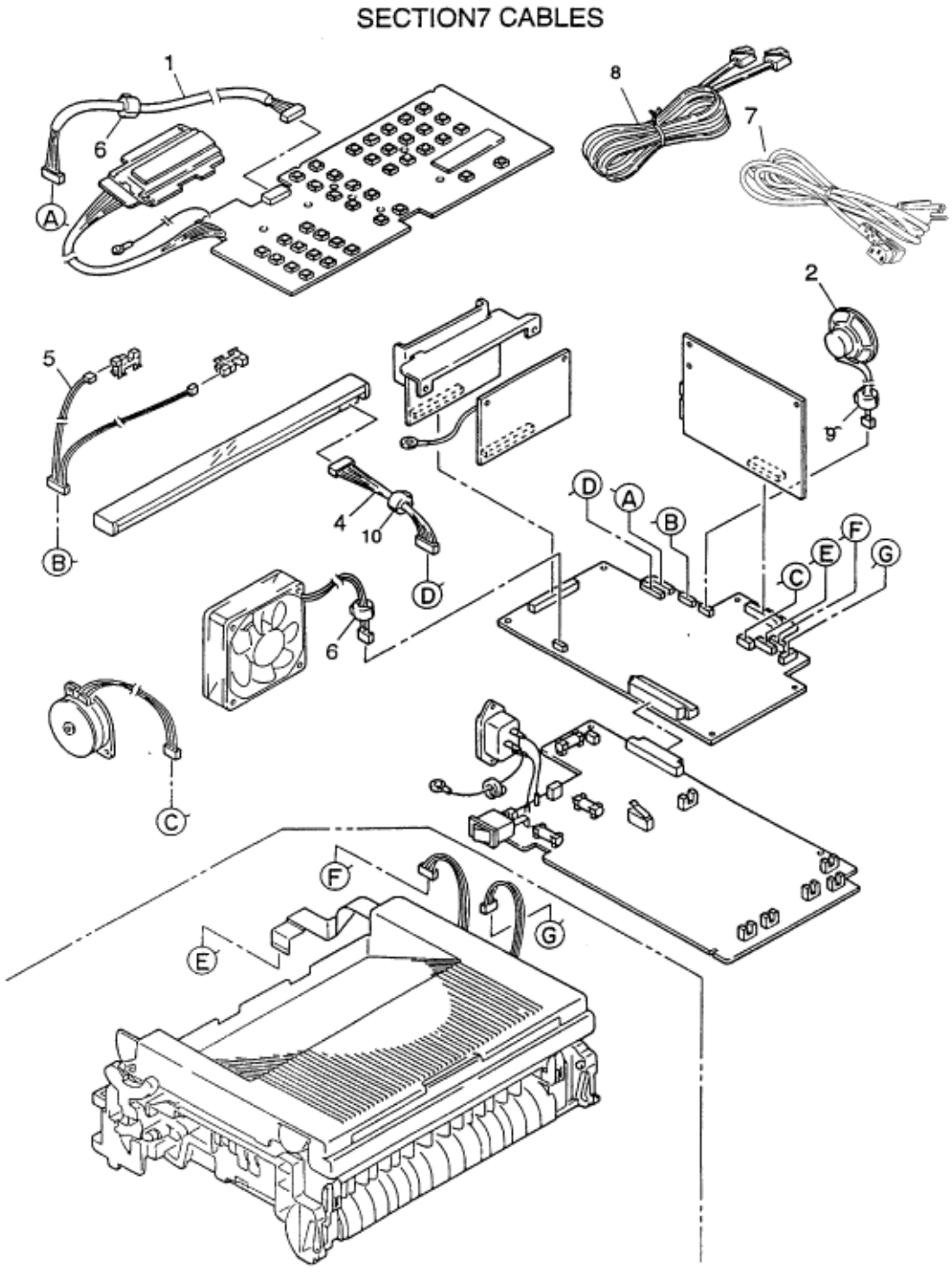

Copyright 1997, Okidata, Division of OKI America, Inc. All rights reserved. See the OKIDATA Business Partner Exchange (BPX) for any updates to this material. (http://bpx.okidata.com)

OKIFAX 2350/2450

SECTION7 CABLES

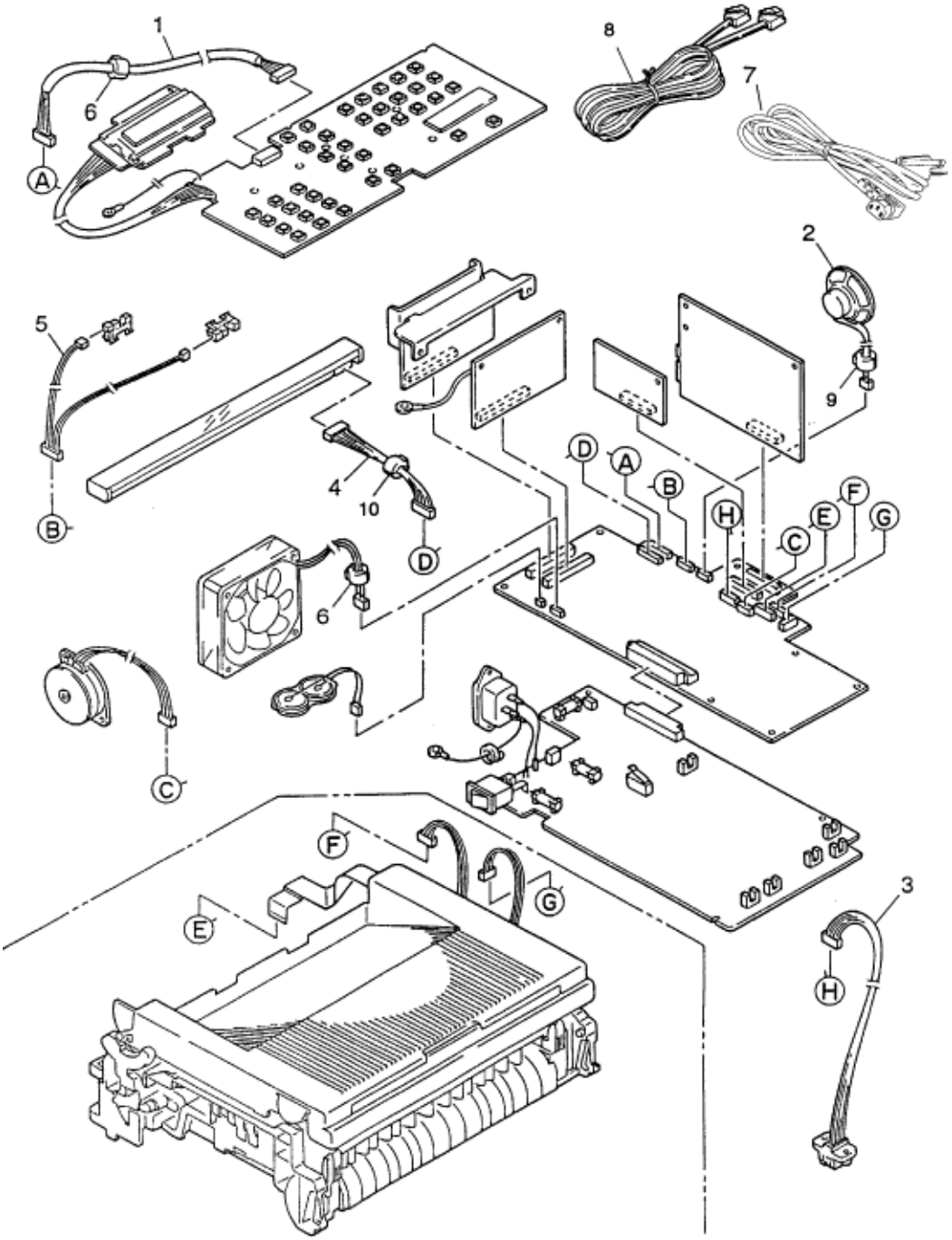

Section 7: Cables

Illustration No.	OKIFAX	Description	Okidata Part Number	Oki Part Number

1	1050/ 2350/ 2450	CABLE: OPE-CONTROL	56632501	4YS4111-3440P1
2	1050/ 2350/ 2450	SPEAKER	57001701	4YB4120-1026P1
3	2350/ 2450	CABLE: 2ND TRAY CONNECTOR	56632801	3YS4111-3527P1
4	1050/ 2350/ 2450	CABLE: SCAN-CONTROL	56632601	4YS1111-3441P1
5	1050/ 2350/ 2450	CABLE: ADF SENS-CONTROL	56632701	4YS1111-3442P1
6	1050/ 2350/ 2450	CORE: FERRITE	55505201	105A1070C0001
7	1050/ 2350/ 2450	CORD: AC POWER	56618901	4YS3512-1485P1
8	1050/ 2350/ 2450	CABLE: TEL/LINE	56621001	236A3161P2
9	1050/ 2350/ 2450	CORE: FERRITE	55505303	105A1051C1003
10	1050/ 2350/ 2450	CORE: FERRITE	55505203	105A1070C0003

Copyright 1997, Okidata, Division of OKI America, Inc. All rights reserved. See the OKIDATA Business Partner Exchange (BPX) for any updates to this material. (http://bpx.okidata.com)

Section 8: Packaging

Illustration No.	OKIFAX	Description	Okidata Part Number	Oki Part Number
1	1050/ 2350/ 2450	BOX: SPARES KRAFT	53552208	N/A
2	1050/ 2350/ 2450	FOAM: PACKAGING (TOP)	53581601	N/A
3	1050/ 2350/ 2450	FOAM: PACKAGING (BOT. L)	53581602	N/A
4	1050/ 2350/ 2450	FOAM: PACKAGING (BOT. R)	53581603	N/A

Copyright 1997, Okidata, Division of OKI America, Inc. All rights reserved. See the OKIDATA Business Partner Exchange (BPX) for any updates to this material. (http://bpx.okidata.com)

PREFACE

This Manual is intended for maintenance personnel and describes the field maintenance methods for High Capacity Second Paper Feeder option of OKIFAX 2350/2450 Series Plain Paper Facsimile Systems.

Copyright 1997, Okidata, Division of OKI America, Inc. All rights reserved. See the OKIDATA Business Partner Exchange (BPX) for any updates to this material. (http://bpx.okidata.com)

9.1 Outline

9.1.1 Functions

The OKIFAX is mounted on top of this High Capacity Second Paper Feeder. The High Capacity Second Paper Feeder supplies paper automatically through the operation of pulse motor (hopping), which is driven by signals sent from the printer. The main functions are the followings:

Paper that can be used:
Paper Type Standard paper: Xerox 4200 (20-lb) Special paper: OHP sheets (for PPC), Label sheets (PPC sheets); use of envelopes or thick paper is not possible. Cut sheet size: A4, A5, B5, Letter, Executive, Legal13, Legal14 Special size: Paper width: 87 to 216mm Paper length: 190 to 355.6mm

Weight 16-lb to 24-lb (60 to 90 g/m 2)
Paper setting quantity: 500 sheets of paper weighing 64 g/m 2

9.1.2 External View and Component Names

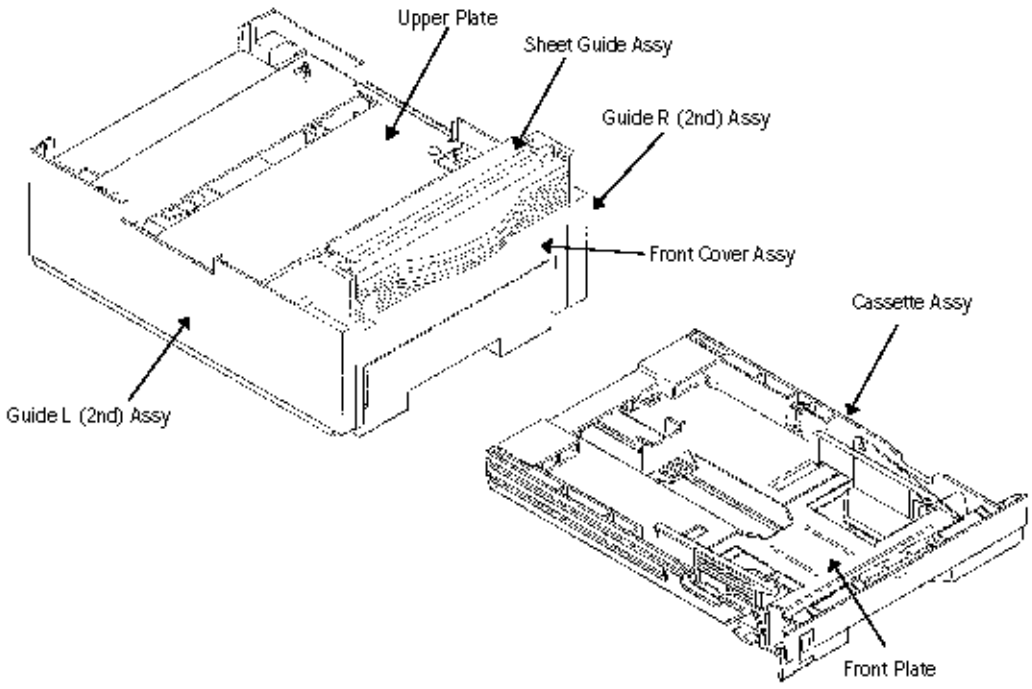

Fig. 1-1 External View and Component Names

Copyright 1997, Okidata, Division of OKI America, Inc. All rights reserved. See the OKIDATA Business Partner Exchange (BPX) for any updates to this material. (http://bpx.okidata.com)

9.2 Mechanism Description

9.2.1 General Mechanism

The High Capacity Second Paper Feeder feeds the paper into the printer by receiving the signal from the OKIFAX unit, which drives the pulse motor inside the High Capacity Second Paper Feeder, and this motion is transmitted to rotate the one-way clutch of the hopping frame assembly. The paper is delivered from the hopper into the printer through the turning of the hopping roller and feed roller.
Once delivered into the facsimile, the paper is then controlled and fed through by pulse motor (registra-tion) of the printer.

9.2.2 Hopper Mechanism

The hopper automatically feeds the facsimile with the paper being set, single sheet at a time. When the paper is loaded in the paper cassette, it is then transported by the pulse motor, carrying forward only a single sheet caught by the brake shoe at a time.

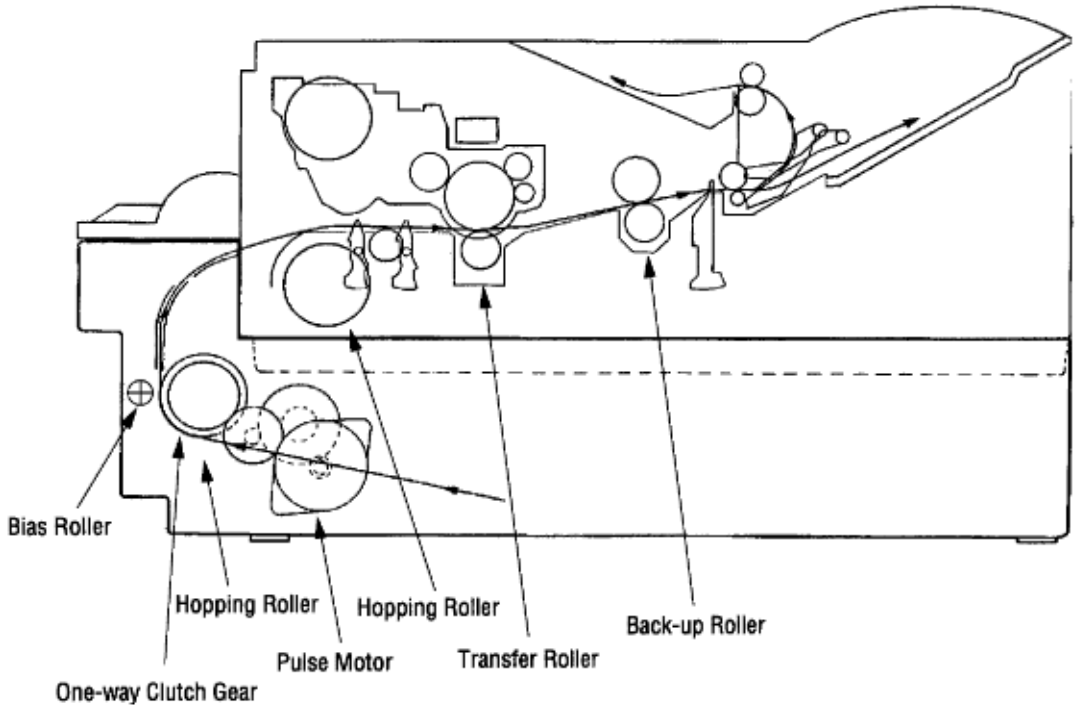

Copyright 1997, Okidata, Division of OKI America, Inc. All rights reserved. See the OKIDATA Business Partner Exchange (BPX) for any updates to this material. (http://bpx.okidata.com)

9.3 PARTS REPLACEMENT

This section covers the procedures for the disassembly, reassembly and installations in the field. This section describes the disassembly procedures, and for reassembly procedures, basically proceed with the disassembly procedures in the reverse order.

9.3.1 Precautions Concerning Parts Replacement Use good anti-static precautions.

Note: Parts replacements must be carried out, by first turning the OKIFAX power switch off O and removing the printer from the High Capacity Second Paper Feeder.

1. Do not disassemble the High Capacity Paper Feeder if it is operating normally.
2. Establish the extent of disassembly suitable for the purpose of the procedure, and do not disassemble any more than necessary.
3. Only specified service tools may be used.
4. Disassembly must be carried out according to the prescribed procedures. Parts may be damaged if such procedures are not followed.
5. Small parts such as screws and collars can easily be lost, therefore these parts should be temporarily fixed in the original location.
6. When handling printed circuit boards, do not use any glove which may generate static electricity.
7. Do not place the printed circuit boards directly on the equipment or floor.

Service Tools
Table 3-1 shows the tools required for the replacement of printed circuit boards, assemblies and units in the field.

Table 3-1 Service Tools

No.	Service Tools		Q'ty	Application	Remarks
1	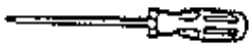	No. 1-100 Philips screwdriver	1	2 ~ 2.5 mm screws	
2	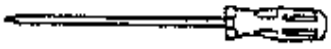	No. 2-100 Philips screwdriver	1	3 ~ 5 mm screws	
3		No. 3-100 screwdriver	1		
4		Digital multimeter	1		
5		Pliers	1		

Copyright 1997, Okidata, Division of OKI America, Inc. All rights reserved. See the OKIDATA Business Partner Exchange (BPX) for any updates to this material. (http://bpx.okidata.com)

9.3.2 Parts Layout

This section describes the layout of the main components.

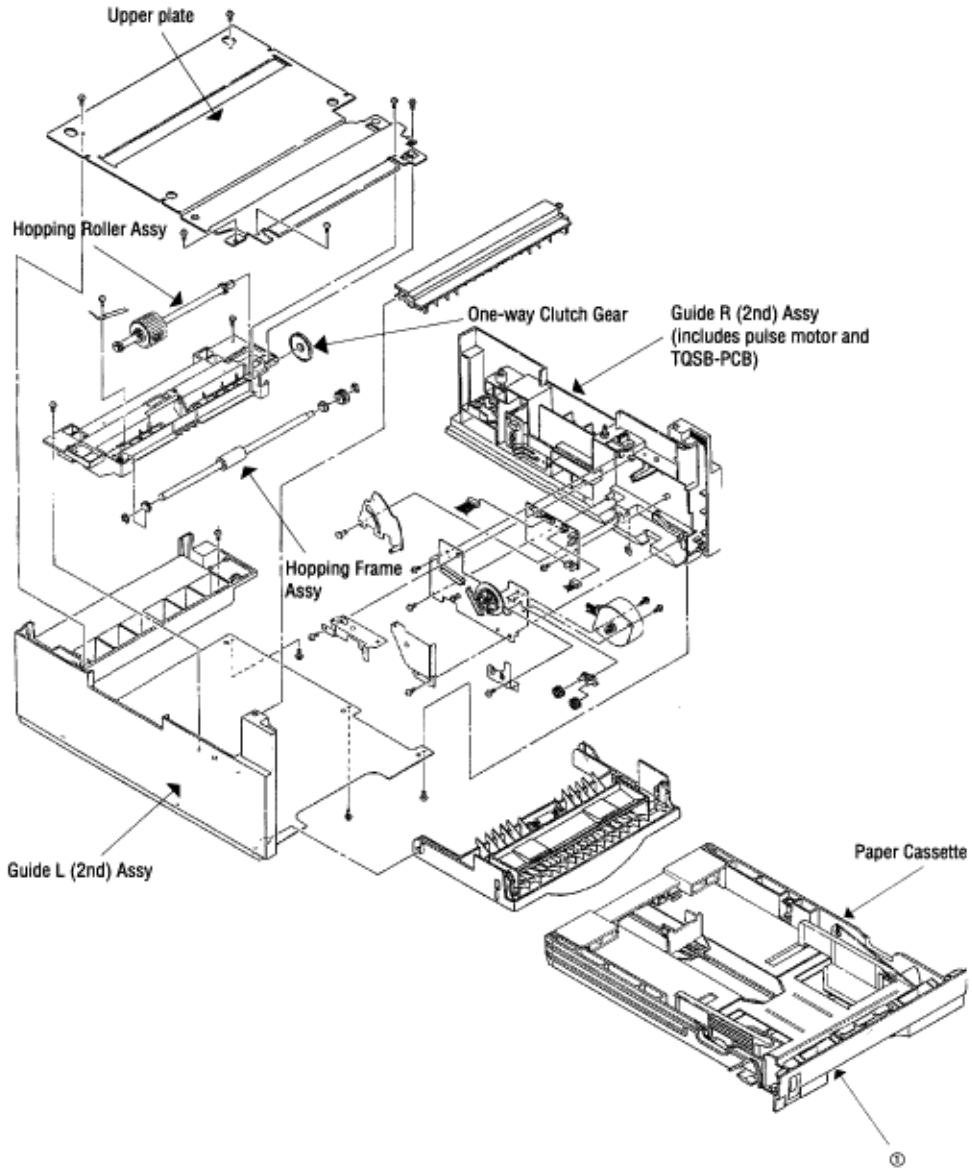

Fig. 3-1

Copyright 1997, Okidata, Division of OKI America, Inc. All rights reserved. See the OKIDATA Business Partner Exchange (BPX) for any updates to this material. (http://bpx.okidata.com)

9.3.3 Parts Replacement Methods

This section describes the parts replacement methods for the components listed in the disassem-bly order diagram below.

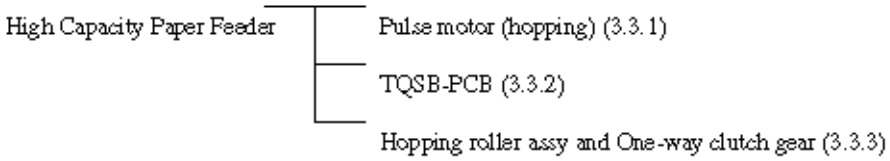

Copyright 1997, Okidata, Division of OKI America, Inc. All rights reserved. See the OKIDATA Business Partner Exchange (BPX) for any updates to this material. (http://bpx.okidata.com)

9.3.3.1. Pulse Motor (Hopping)

1) Turn the OKIFAX power switch off, pull out the AC cord from the outlet. Remove the OKIFAX from the High Capacity Second Paper Feeder.

2) Take the paper cassette assy 1 out of High Capacity Second Paper Feeder.

3) Remove six screws 2 and remove the upper plate 3. Remove two screws 5 and remove the hopping frame assy 6.

4) Remove the front cover assy 4 off the guide boss on the guide L (2nd) assy 7 by bending the guide L (2nd) assy 7 in the direction of arrow shown in the magnified view below.

5) Pull the sheet guide assy 8 in the direction of arrow a and also push in the direction of arrow b to unlock the notch, and bring the sheet guide assy 8 in the direction of arrow c to remove the sheet guide assy 8.

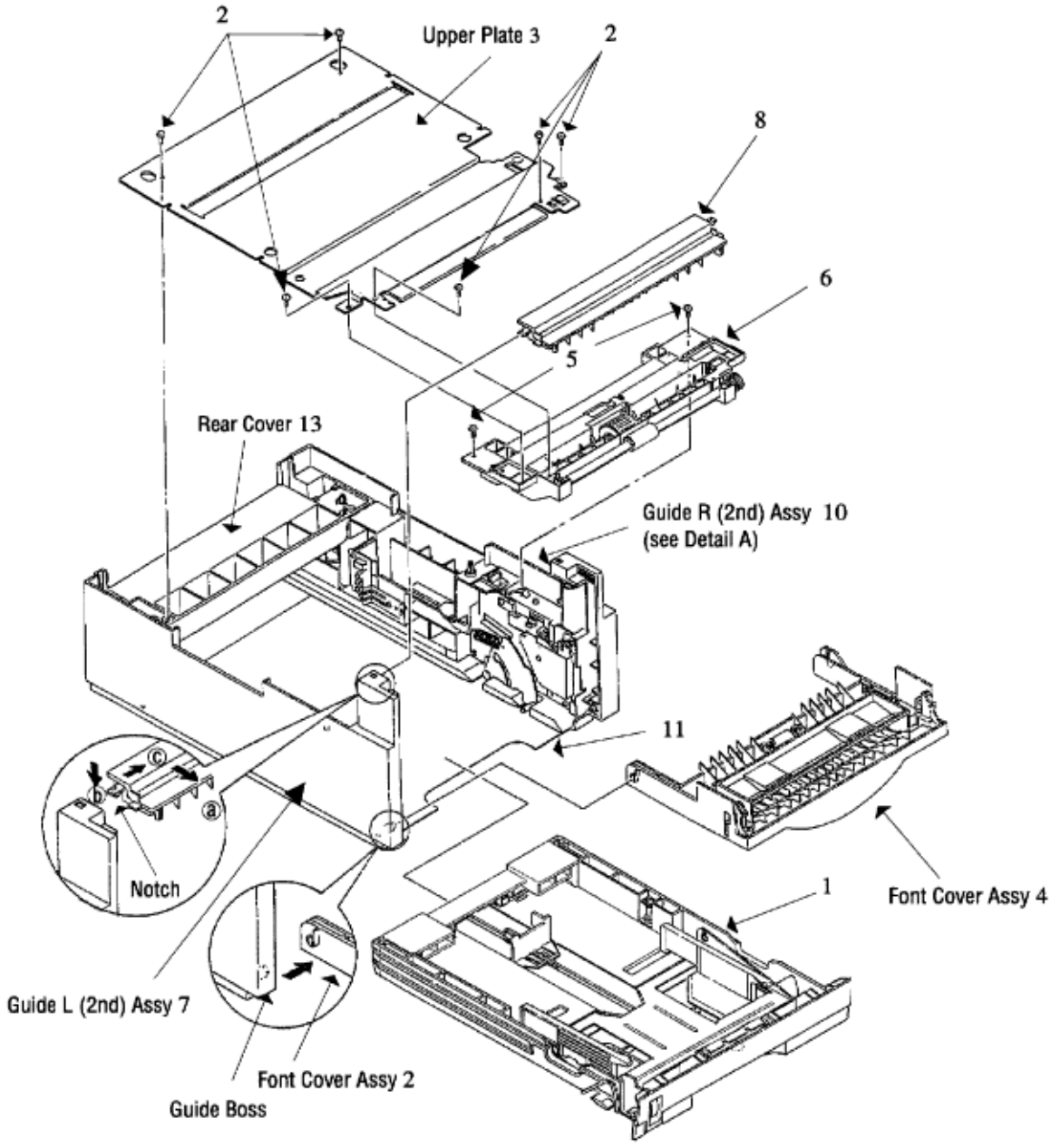

6) Remove three screws 9 which are holding the guide R (2nd) assy 0 to the bottom plate A. Remove the screw B which is keeping the rear cover C and guide R (2nd) assy 0. Remove the guide R (2nd) assy 0.

7) Remove the protect (M) D, guide bracket E, planet gears F and planet gear bracket G.

8) Remove the E-ring H which is keeping the sheet link I on the guide R (2nd) assy 0, and pull out the hinge stand J.

9) Remove three remaining screws K which are keeping the motor on the motor bracket L, and remove the connector off the motor M.

10) Remove two screws N on the motor M.

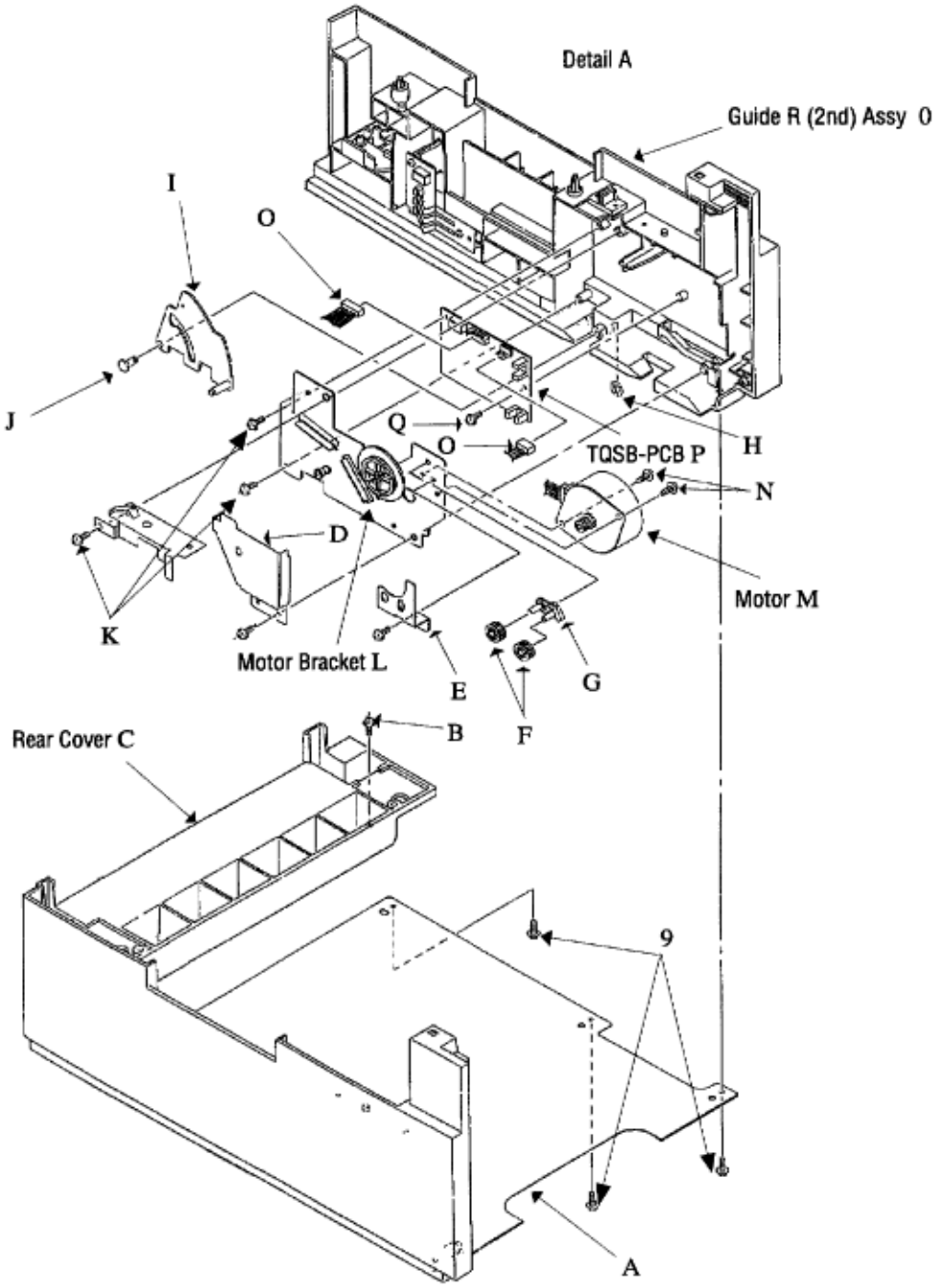

Copyright 1997, Okidata, Division of OKI America, Inc. All rights reserved. See the OKIDATA Business Partner Exchange (BPX) for any updates to this material. (http://bpx.okidata.com)

9.3.3.2. TQSB-PCB

1) Remove the pulse motor **(see 9.3.3.1).**

2) Remove the connector O from the TQSB-PCB P. 3) Remove the screw Q and remove the TQSB-PCB P.

Note : Refer to Detail A in the previous page.

3.3.3. Hopping Roller Assy and One-way Clutch Gear

1) Follow up to step (3) of **9.3.3.1** and remove the hopping frame assy.

2) Remove the screw 1 and remove the earth plate 2. Remove the gear 3 and remove the hopping roller 4.

3) Take out the feed roller 7. Remove the E-ring 5 and ADF bearing 6 on the left side of feed roller 7.

4) Remove the E-ring 8 and remove the one-way clutch gear 9 on the right side of the feed roller 0.

Note : The ADF bearing 0 also comes off. Be careful not to lose it.

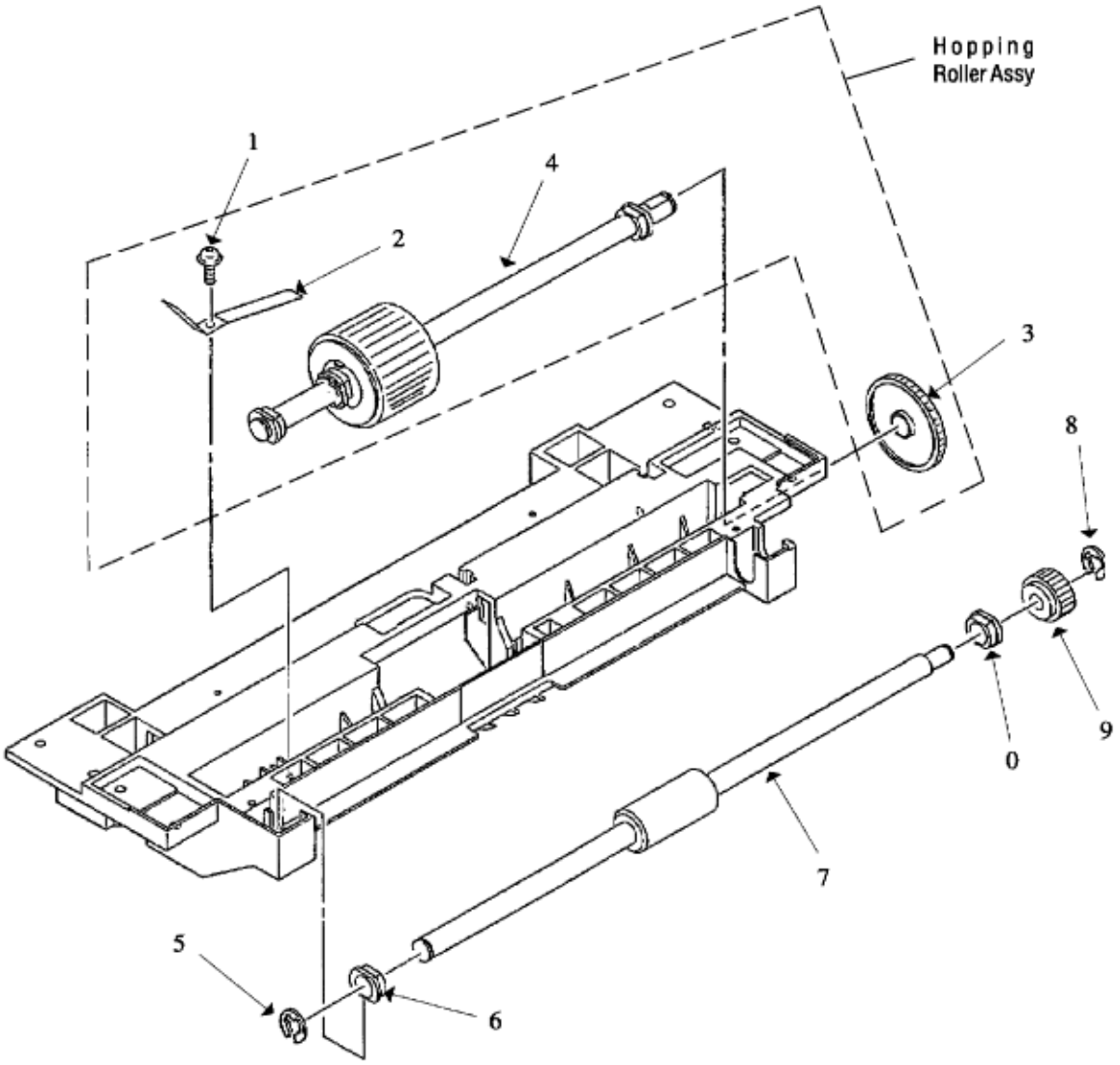

Copyright 1997, Okidata, Division of OKI America, Inc. All rights reserved. See the OKIDATA Business Partner Exchange (BPX) for any updates to this material. (http://bpx.okidata.com)

9.4 Troubleshooting

9.4.1 Precautions Prior to the Troubleshooting

Go through the basic checking items provided in the prior sections of this Handbook. Obtain detailed information concerning the problem from the user. Go through checking in the conditions similar to that in which the problem occurred.

9.4.2 Preparations for the Troubleshooting

Display on the Operator panel - The status of the problem is displayed on the LCD (Liquid Crystal Display) on the Operator panel. Go through the appropriate troubleshooting procedures according to the messages displayed on the LCD.

9.4.3 Troubleshooting Method

When a problem occurs, go through the troubleshooting according to the following procedure.

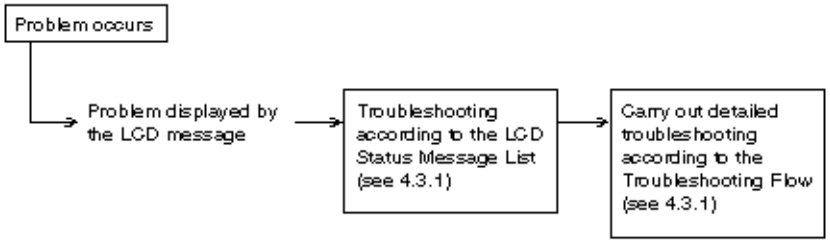

4.3.1 LCD Status Message List

The listing of the statuses and problems displayed in the form of messages on the LCD is provided in Table 4-1.

Classification	LCD Status Message	Description	Recovery Method
Jam error (feeding)	PAPER MIS FEED REPLACE PAPER	Notifies of occurrence of jam while the paper is being fed from High Capacity Second Paper Feeder.	• Check the paper in the High Capacity Second Paper Feeder. Carry out the recovery printing by opening and closing the cover, and turn the error display off. • When the problem occurs frequently, go through the Trouble-shooting.

Jam error (ejection) (see note below)	PAPER JAM REPLACE PAPER	Notifies of occurrence of jam while the paper is being ejected from the printer.	• Check the paper in the printer. Carry out the recovery printing by opening and closing the cover, and turn the error display off.
Paper size error	PAPER JAM REPLACE PAPER	Notifies of incorrect size paper feeding from High Capacity Second Paper Feeder.	• Check the paper in the High Capacity Second Paper Feeder. Also check to see if there was a feeding of multiple sheets. Carry out the recovery printing by opening and closing the cover, and turn the error display off.

Note: The OKIFAX 2350/2450 must be programmed for the size of paper loaded in both the first, and optional second cassettes. (User function number 10 for first cassette size, and number 11 for optional second cassette size). If paper hopper is of a different size than programmed, a logical jam will occur.

JAM error
Paper Inlet Jam

- Does paper jam at the inlet when the power is turned on?
  - YES — Is the paper located above the sensor plate (inlet)?
    - YES — Remove the paper.
  - NO — Is the sensor plate (inlet) operating normally?
    - NO — Replace the sensor plate (inlet).
  - YES — Replace the power supply/sensor board or inlet sensor.
- NO — When the paper is fed in, does the paper inlet jam occur?
  - YES — Is the paper being fed to above sensor plate (inlet)?
    - YES — Is the sensor plate (inlet) operating normally?
      - NO — Replace the sensor plate. (inlet)
    - YES — Clean the inlet sensor on the power supply/sensor board or replace the power supply/sensor board or inlet sensor.
  - NO — Replace the hopping roller shaft assy or paper cassette.
- NO — Are the hopping roller and feed roller rotating?
  - YES — Set the paper properly.
- NO — Is the pulse motor turning?
  - YES — Replace the hopping roller assy or one-way gear on the feed roller assy.
- NO — Is the connector being connected properly?
  - NO — Connect the connector properly.
- YES — Check the coil resistance (approx. 4.3Ω) of the pulse motor. Is it normal?
  - NO — Replace the pulse motor.
- YES — Replace the TQSB-PCB.

Copyright 1997, Okidata, Division of OKI America, Inc. All rights reserved. See the OKIDATA Business Partner Exchange (BPX) for any updates to this material. (http://bpx.okidata.com)

9.5 Connection Diagram

9.5.1 Interconnection Diagram

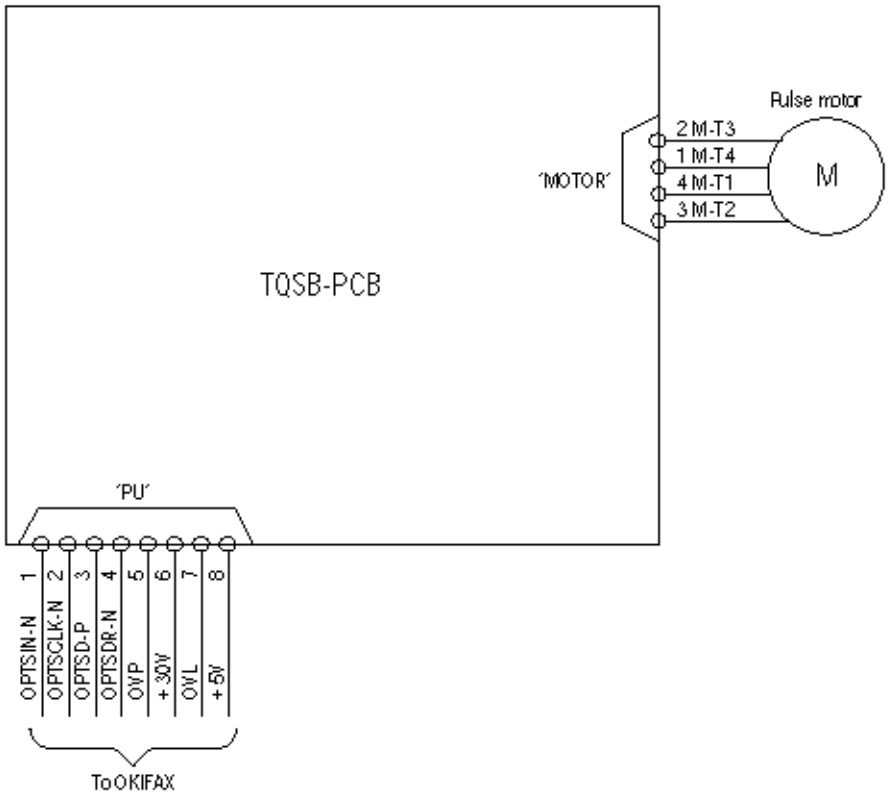

Copyright 1997, Okidata, Division of OKI America, Inc. All rights reserved. See the OKIDATA Business Partner Exchange (BPX) for any updates to this material. (http://bpx.okidata.com)

9.5.2 PCB Layout

TQSB-PCB

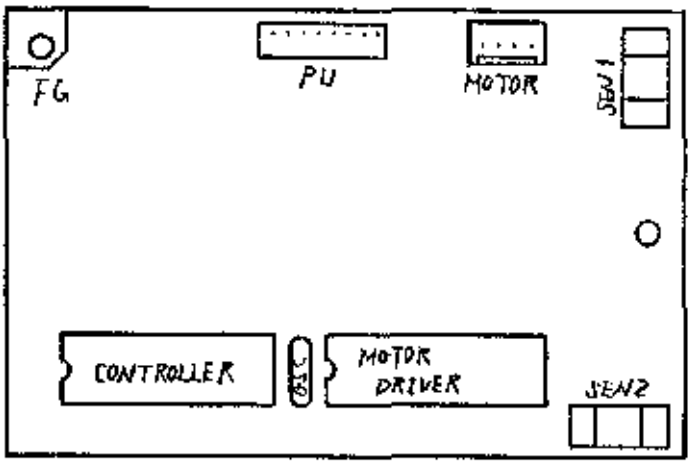

Copyright 1997, Okidata, Division of OKI America, Inc. All rights reserved. See the OKIDATA Business Partner Exchange (BPX) for any updates to this material. (http://bpx.okidata.com)

9.6 Parts List

2nd Tray ASSEMBLY

SECTION1
CABINET & CASSETTE ASSEMBLY

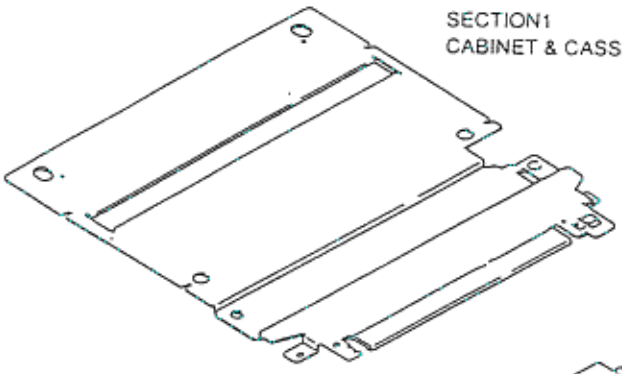

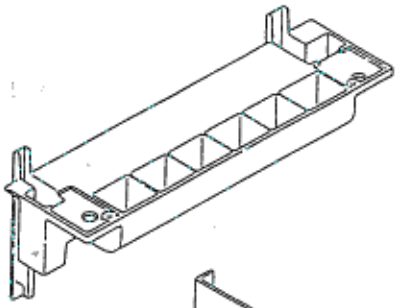

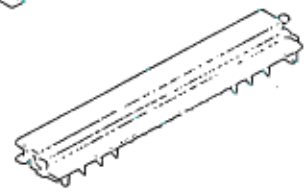

SECTION2
MECHANICAL ASSEMBLY

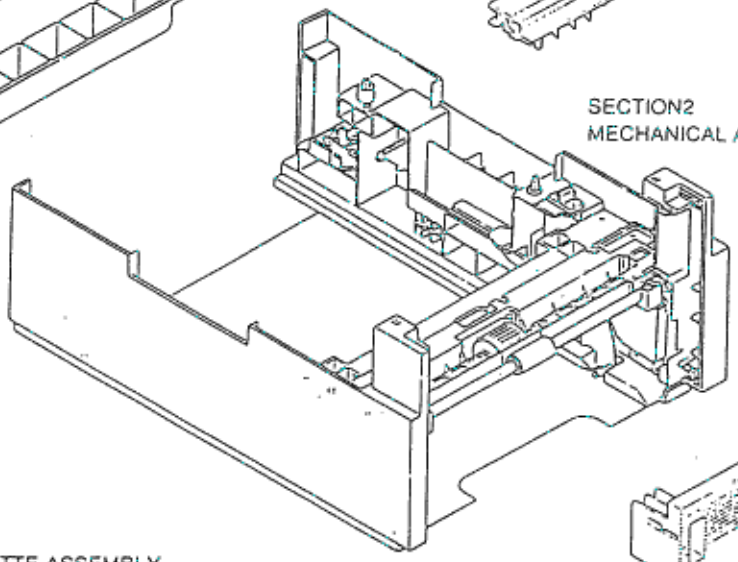

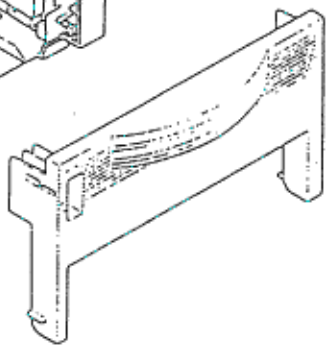

SECTION1
CABINET & CASSETTE ASSEMBLY

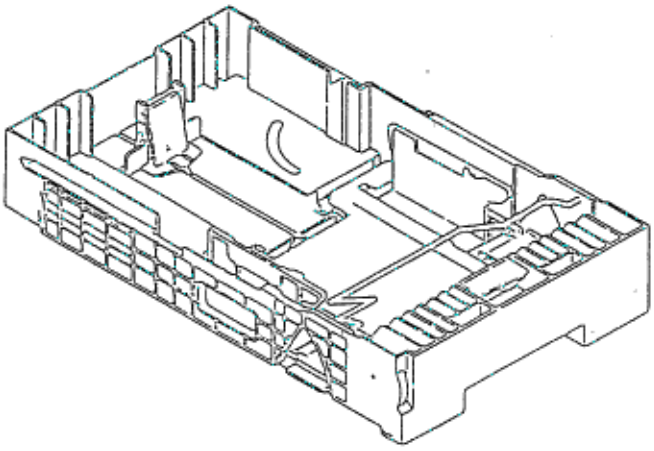

SECTION1 CABINET & CASSETTE ASSEMBLY

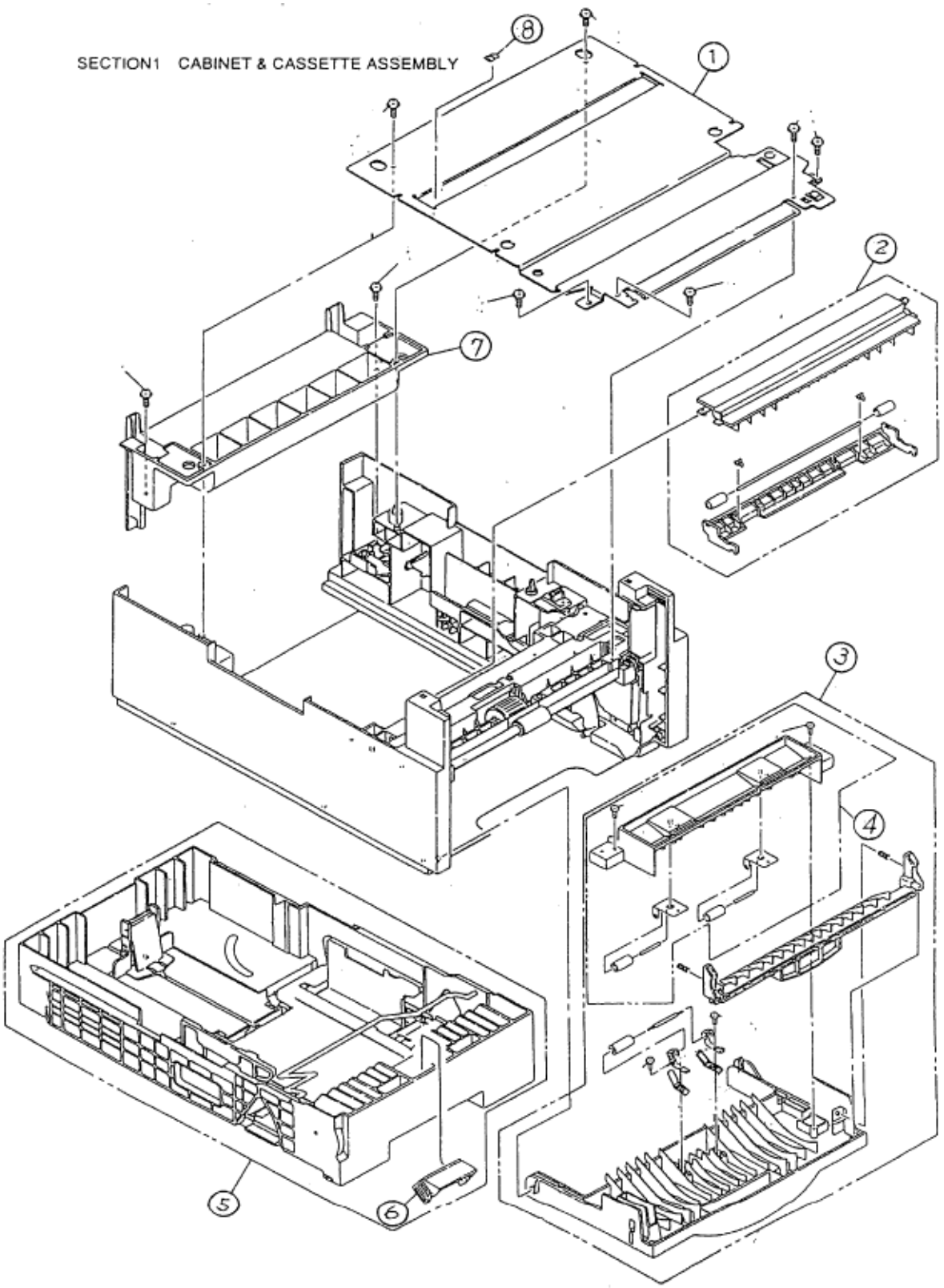

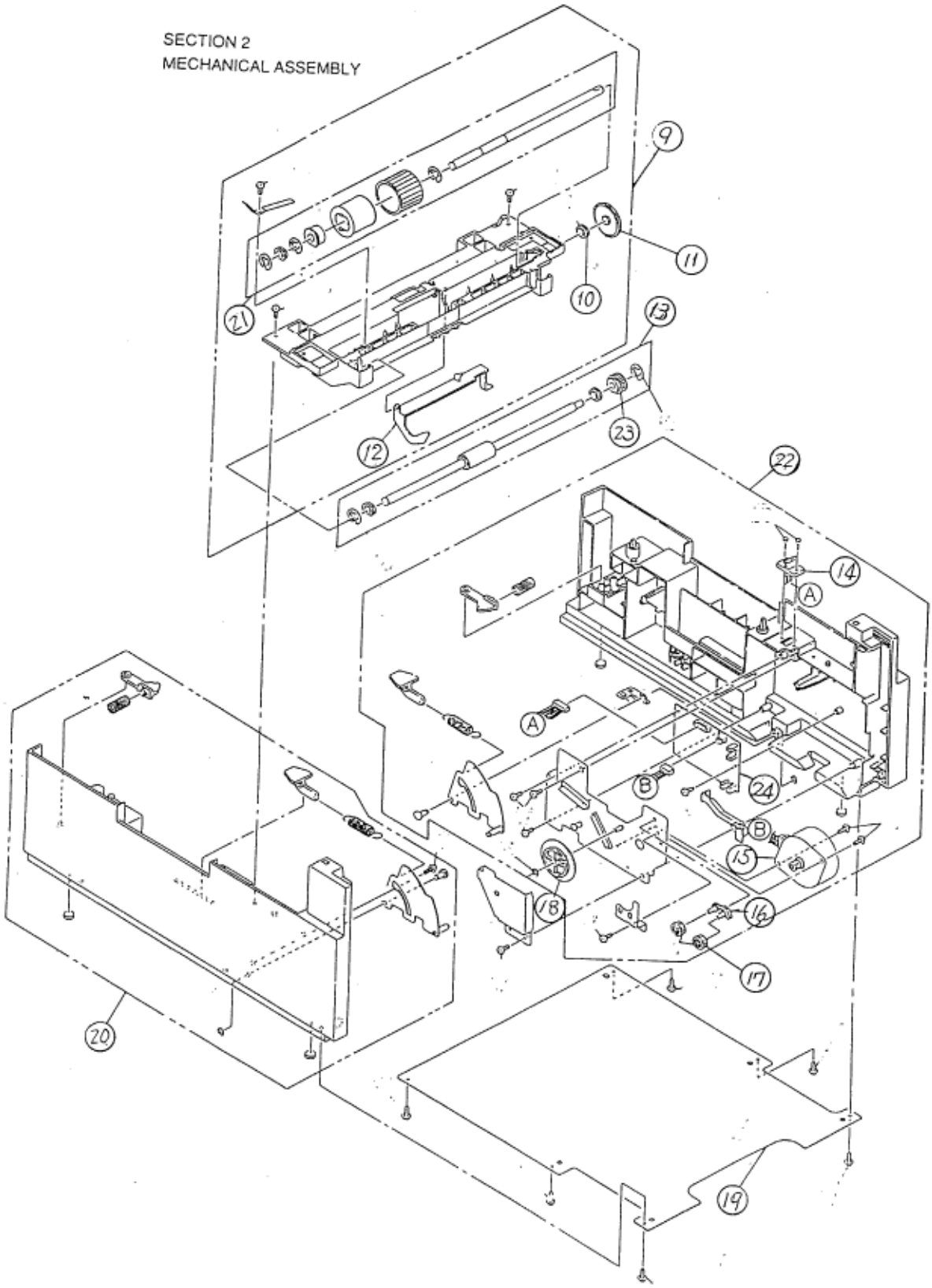

Figure 6-1 High Capacity Second Paper Feeder

Table 6-1 High Capacity Paper Feeder

No.	Description	OKI-J Part No.	OKIDATA Part No.	Qty
1	Plate: Upper	1PP4122-1401P001	51023301	1
2	Guide: Sheet Assembly	3PA4122-1370G001	50222001	1
3	Cover: Front Assembly	1PA4122-1369G001	53075301	1
4	Guide: Inner Assembly	3PA4122-1371G001	50221501	1
5	Cassette: Assy 2nd Tray	1PA4122-1362G004	50107304	1
6	Frame: Separation (F) Assy	4PP4120-1009G001	50222101	1
7	Cover: Rear	1PP4122-1323P001	53075201	1
8	Ground: Stick Finger	4PB4122-1441P001	51023401	1
9	Frame: Hopping Assembly	1PA4122-1366G001	50222401	1
10	Bearing	4PP3522-3568P001	51608901	1
11	Gear (Z70)	4PP4122-1207P001	51239001	1
12	Sensor: Lever (P)	3PP4122-1331P001	50411201	1
13	Roller: Feed Assembly	3PA4122-1393G001	50222501	1
14	Cable and Connector	3YS4111-3528P001	56633901	1
15	Motor: Pulse	3PB4122-1399P001	56512201	1
16	Bracket	4PP4122-1384G001	51712001	1
17	Gear (Z24)	4PP4122-1383P001	51238901	2
18	Gear (Z87/Z60)	4PP4122-1226P001	51239101	1
19	Plate: Bottom	2PP4122-1389P001	51023201	1
20	Guide: 2nd Cassette (L) Assy	1PA4122-1365G001	50222301	1
21	Roller: Hopping Assy 2nd Tray	3PA4122-1367G001	50409501	1
22	Guide: 2nd Cassette (R) Assy	1YX4122-1364G002	50222201	1
23	Clutch: One-Way 2nd Tray	4PP4122-1382P001	51401101	1
24	PCB: TQSB (2nd Feeder)	4YA4046-1651G002	55078102	1

Copyright 1997, Okidata, Division of OKI America, Inc. All rights reserved. See the OKIDATA Business Partner Exchange (BPX) for any updates to this material. (http://bpx.okidata.com)